Lecture 4:

Developing Project Scheduling Plan

Dr. Eng.
Abdullah Jameel Halawany

جامعة الجميع الذكية

EVERYONE`S SMART UNIVERSITY

PMG 605

Project Resources and Time Management

Developing a Project Scheduling Plan

Session Outline

- Last Lecture Review
- Gantt Charts
- Developing Project Networks
  - CPM
  - PERT
- Extended Network Techniques to Come Closer to Reality

Last Lecture Review

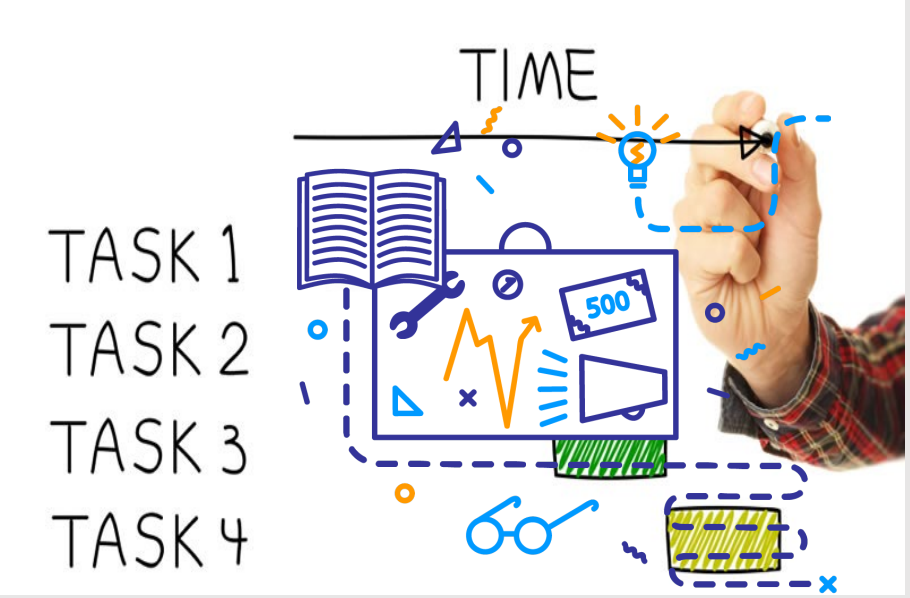

Project Management Activities

- Planning
  - Objectives
  - Resources
  - Work break-down structure
  - Organization

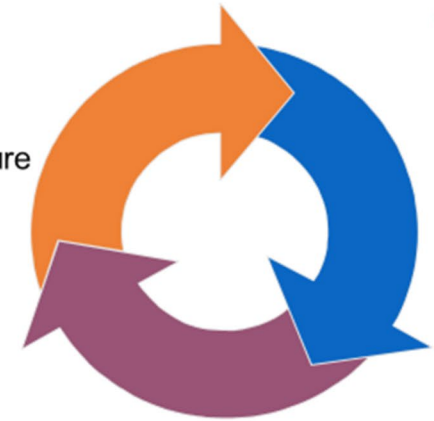

- Scheduling
  - Project activities
  - Start and end times
  - Network
- Controlling
  - Monitor, compare, revise, action

Project Planning, Scheduling, and Controlling

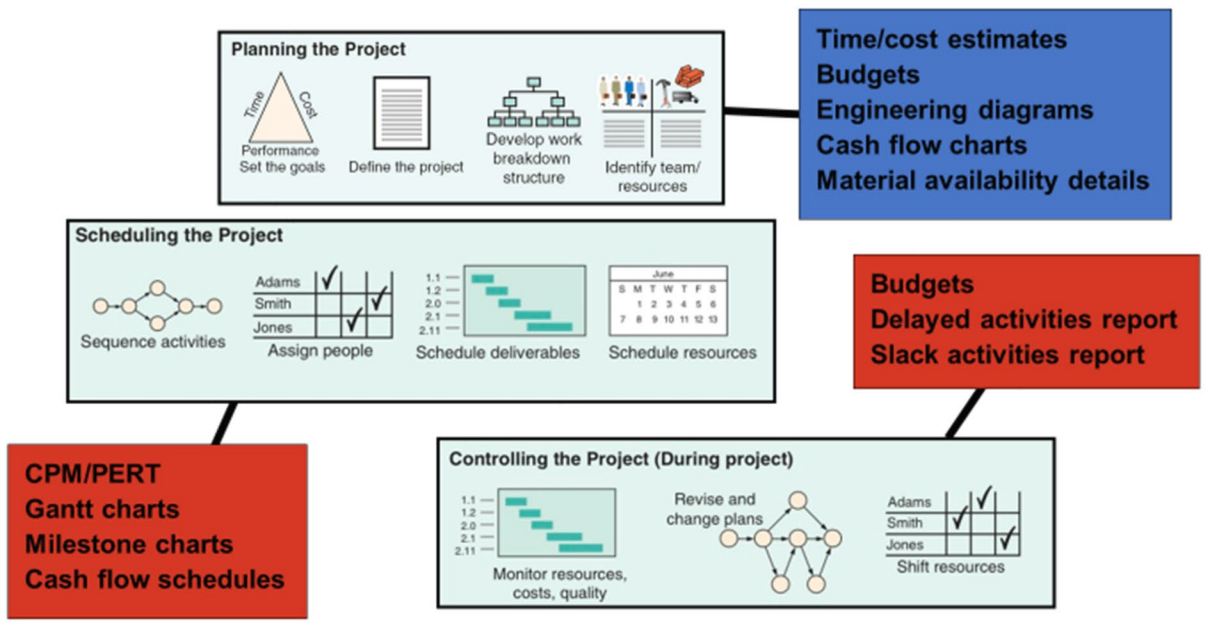

Estimating Process Output

Required *Time* fore each Task (Work Package / Activity) → **Project Scheduling** Project Schedule Baseline

Required *Resources* fore each Task (Work Package / Activity) → **Resources Planning**

Required *Cost* fore each Task (Work Package / Activity) → **Project Budget** Project Cost Baseline

What is Scheduling?

- There are multiple ways of defining scheduling. Scheduling is:
  - Planned completion of a project based on the logical arrangement of activities, resources…
  - Placing the project and its activities in a workable sequenced timetable…
  - A detailed outline of activities/tasks with respect to time…
- While scheduling is all of these things, the main thing to remember is that

  scheduling is the development of planned dates

  for performing project activities and meeting milestones.
- By looking at the abovementioned definitions of scheduling, do you see a difference between planning and scheduling?

Project Scheduling Process

- Project scheduling involves a clear, five step process. This process aids managers in determining the project schedule and, eventually, the project schedule baseline. The process steps are:

1	2	3	4	5	6
Develop the list of project activities	Establish the duration for each activities	Sequence of project activities	Determine the relationships between activities	Develop graphic representation of the logical relationships of project activities	Determine the project duration (start and completion dates)

Project Scheduling

- Project planning is a *prerequisite* to Project Scheduling because there is no way to determine the sequence or start and finish dates of activities until they are identified.

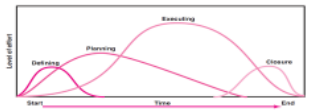

- Terms of project planning and scheduling are often used synonymously because planning and scheduling are performed interactively.
- Planning is more difficult to accomplish than scheduling.
- The real test of the project planner/scheduler is his or her ability to identify all the work required to complete the project.

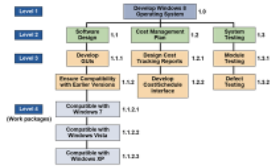

Some Benefits of Successful Scheduling

- Illustrates interdependence of all tasks
- Identifies times when resources must be available
- Facilitates communication throughout the project
- Determines critical activities/critical path
- Affects client expectations through establishment of activities, milestones, and completion dates

Project Scheduling Terms

- The Project Network
- Activity
- Predecessors
- Successors
- Merge Activity
- Burst activity
- Path
- Critical Path
- Duration (D)
- Early start (ES) date
- Early Finish (EF) date
- Late start (LS) date
- Late Finish (LF) date
- Total Float (TF)
- Free Float (FF)
- Lags

Gantt Chart

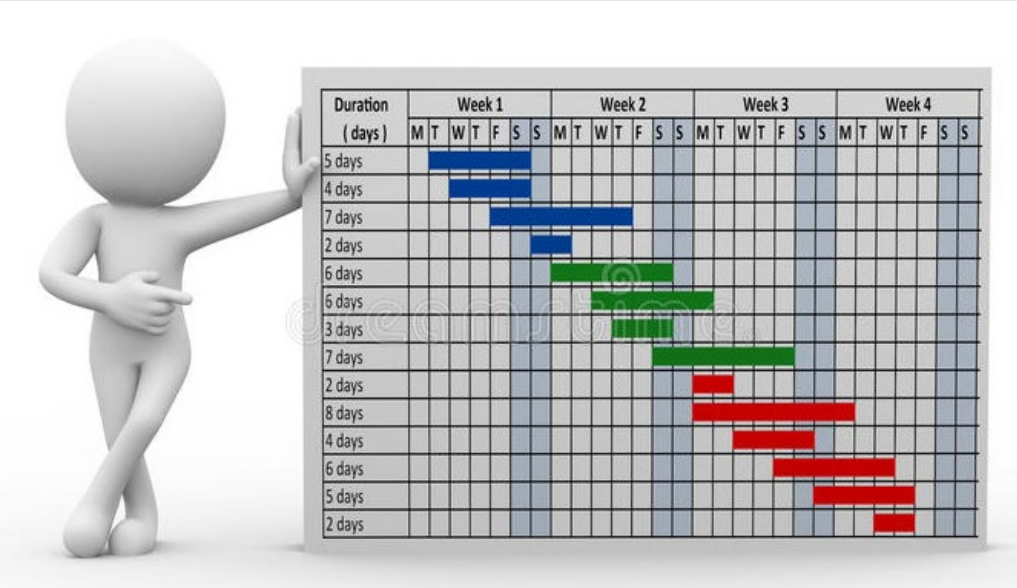
Duration
(days)
Week 1
Week 2
Week 3
Week 4
M T W T F S S M T W T F S S M T W T F S S M T W T F S S
5 days
4 days
7 days
2 days
6 days
6 days
3 days
7 days
2 days
8 days
4 days
6 days
5 days
2 days

Gantt Chart

- ✓ Establish a ***time-phased network***
- ✓ Can be used as a ***tracking tool***

<u>Benefits of Gantt charts</u>

1. Easy to ***understand***
2. Identify the schedule ***baseline*** network
3. Allow for ***updating*** and ***control***
4. Identify ***resource timing needs***
5. Easy to ***create***

A Simple Gantt Chart

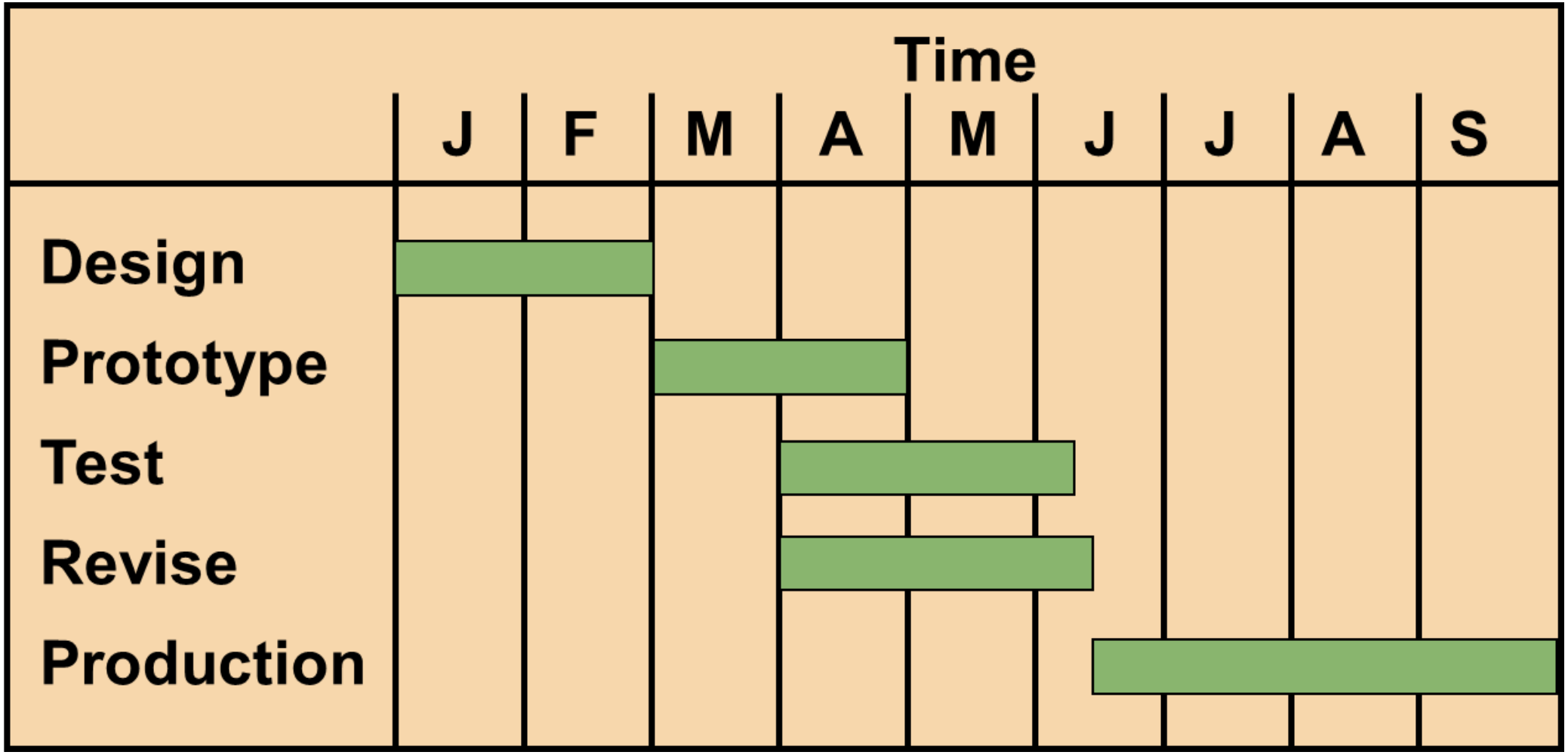

Service For a Delta Jet

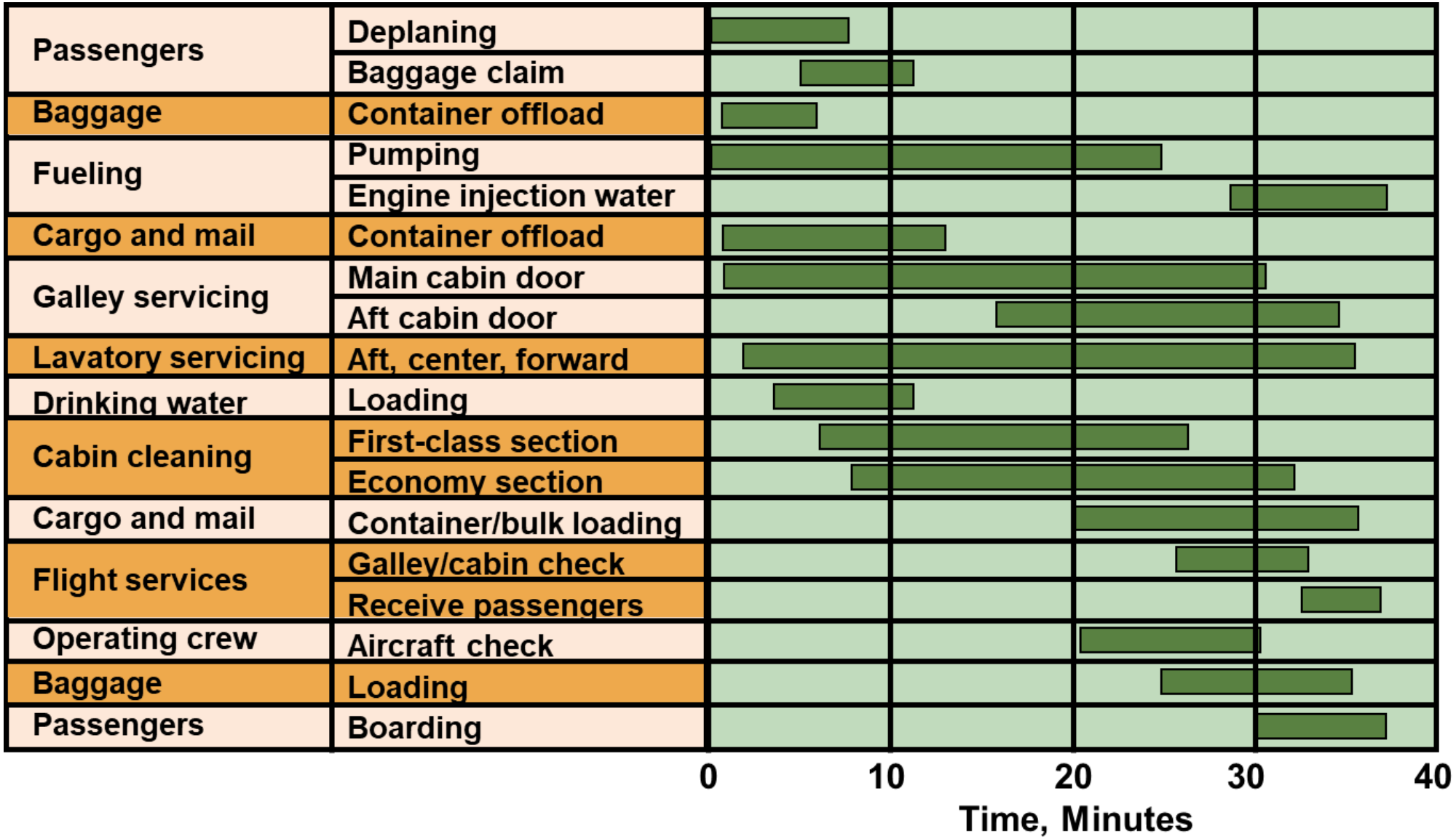

[Project Name] Project Schedule

[Company Name]

Gantt Chart Template © 2006-2018 by Vertex42.com.

Project Start Date: 1/29/2018 (Monday)

Display Week: 1

Project Lead: Ted Harris

WBS	TASK	LEAD	START	END	DAYS	% DONE	WORK DAYS
1	[Task Category]			-			-
1.1	[Task]	[Name]	Mon 1/29/18	Fri 2/02/18	5	100%	5
1.2	[Task]		Sat 2/03/18	Wed 2/07/18	5	60%	3
1.3	[Task]		Thu 2/08/18	Sun 2/11/18	4	0%	2
1.4	[Task]		Thu 2/01/18	Sun 2/04/18	4	75%	2
1.4.1	[Sub-task]		Fri 2/02/18	Sat 2/03/18	2	50%	1
1.4.2	[Sub-task]		Sun 2/04/18	Tue 2/06/18	3	50%	2
1.5	[Task]		Mon 2/05/18	Fri 2/09/18	5	0%	5
1.6	[Task]		Sat 2/03/18	Fri 2/09/18	7	0%	5
1.7	[Task]		Sat 2/10/18	Fri 2/16/18	7	0%	5
2	[Task Category]			-			-
2.1	[Task]		Sat 2/10/18	Tue 2/13/18	4	0%	2
2.2	[Task]		Wed 2/14/18	Fri 2/16/18	3	0%	3
2.3	[Task]		Wed 2/14/18	Fri 2/16/18	3	0%	3
2.4	[Task]		Sat 2/17/18	Thu 2/22/18	6	0%	4
2.5	[Task]		Fri 2/23/18	Sun 2/25/18	3	0%	1
3	[Task Category]			-			-
3.1	[Task]		Sat 2/10/18	Tue 2/13/18	4	0%	2
3.2	[Task]		Wed 2/14/18	Fri 2/16/18	3	0%	3
3.3	[Task]		Wed 2/14/18	Fri 2/16/18	3	0%	3

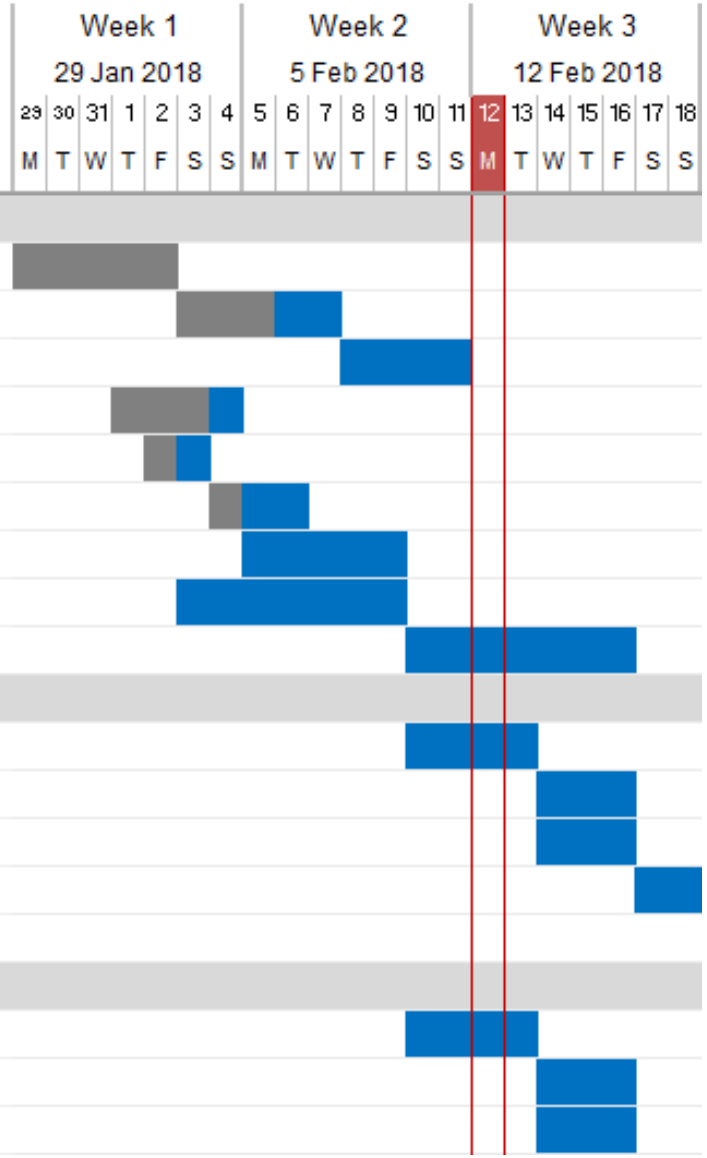

Developing Project Networks

The Project Network

- Flow chart that graphically depicts the sequence, interdependencies, and start and finish times of the project job plan of activities that is the critical path through the network.
- Provides the basis for scheduling labor and equipment
- Highlight activities that are “critical” and can not be delayed
- Enhances communication among project participants
- Provides an estimate of the project’s duration
- Provides a basis for budgeting cash flow
- Help managers get and stay on plan

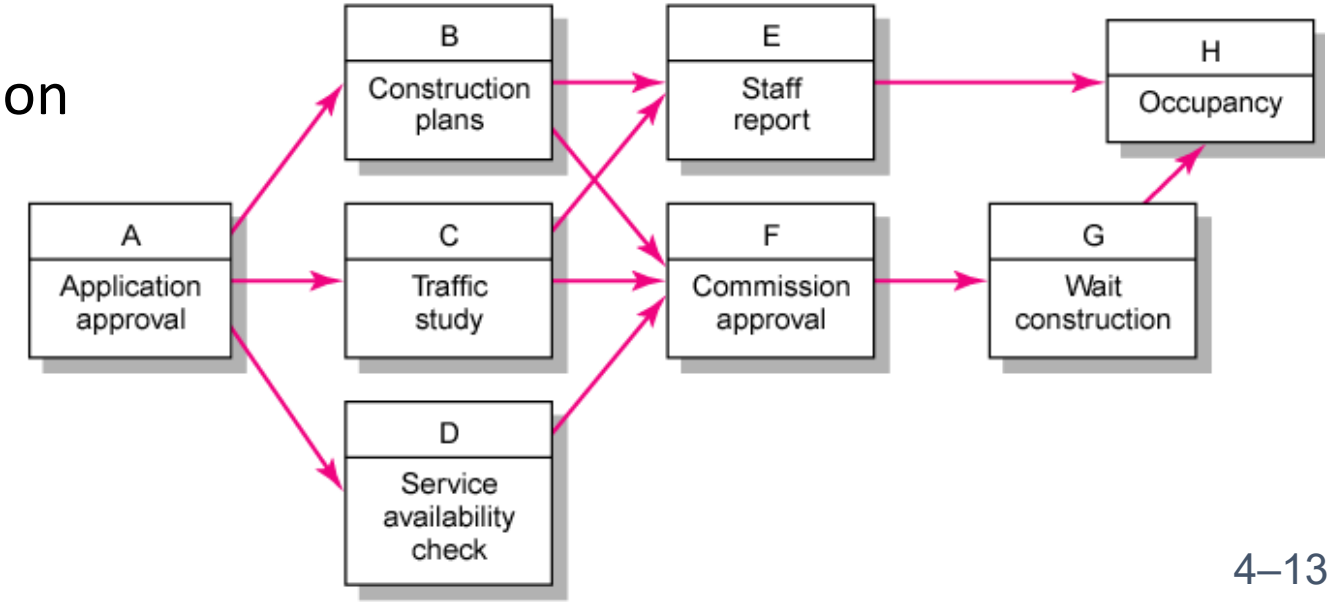

Activity on- node (AON) and Activity-on-arrow (AOA)

- Historically, two methods have been used to develop project networks: Activity on-node (AON) and Activity-on-arrow (AOA)
- Over time the availability of advanced computer graphics improved the clarity and visual appeal of the AON method
- Today, the activity-on-node method has come to dominate nearly all project network plans

8 Basic Rules to Follow in Developing Project Networks

1. Networks flow typically from left to right
2. An activity cannot begin until all preceding connected activities have been completed
3. Arrows on networks indicate precedence and flow. Arrows can cross over each other
4. Each activity should have a unique identification number
5. An activity identification number must be larger than that of any activities that precede it
6. Looping is not allowed

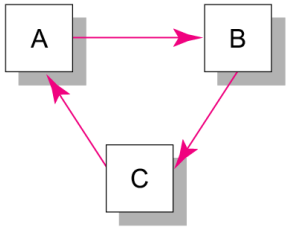

7. Conditional statements are not allowed (If successful, do something; if not, do nothing)
8. When there are multiple starts, a common start node can be used to indicate a clear project beginning on the network. (A single project end node can be used to indicate a clear ending)

Activity-on-Node (AON) Fundamentals

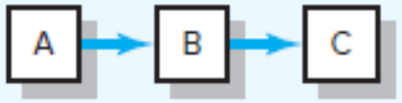

A is preceded by nothing
B is preceded by A
C is preceded by B

(A)

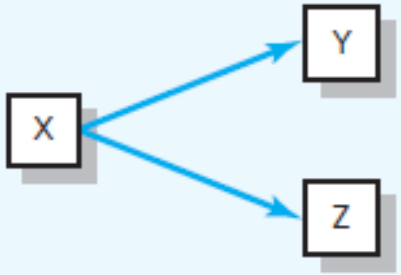

Y and Z are preceded by X

Y and Z can begin at the same time, if you wish

(B) X is a burst activity

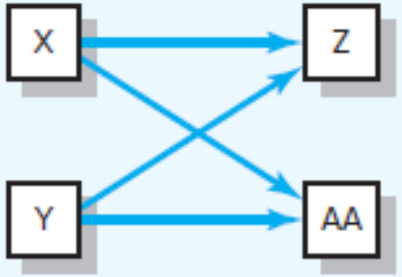

Z is preceded by X and Y

AA is preceded by X and Y

(D)

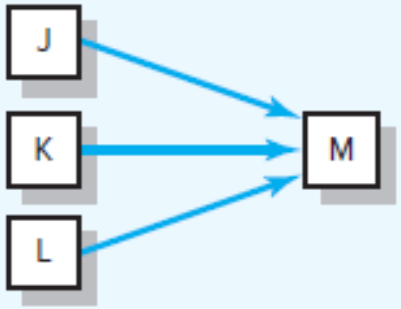

J, K, & L can all begin at the same time, if you wish (they need not occur simultaneously)

but

All (J, K, L) must be completed before M can begin

(C) M is a merge activity

Activity-on-Node (AON) Fundamentals

Activity Format

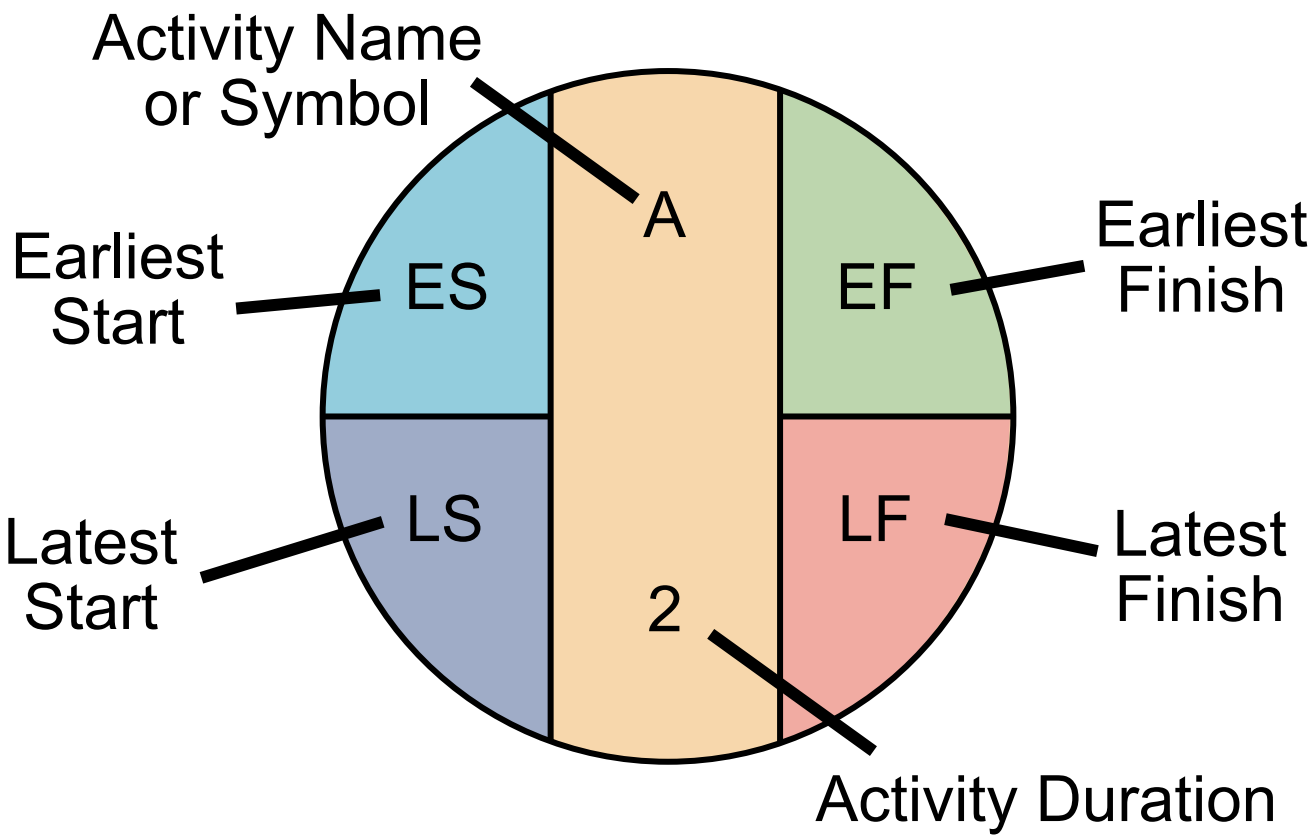

Early start	Identifier number	Early finish
Activity float	Activity descriptor	
Late start	Activity duration	Late finish

PERT and CPM

- Two major duration estimating tools can help project managers estimate the activity duration: the PERT and CPM.
- Network techniques
- Developed in 1950s
  - CPM by DuPont for chemical plants (1957)
  - PERT by Booz, Allen & Hamilton with the U.S. Navy, for Polaris missile (1958)
- Consider precedence relationships and interdependencies
- Each uses a different estimate of activity times

PERT and CPM

- CPM – Critical Path Method
- PERT – Program Evaluation and Review Technique
- Three-time estimates can be applied to any activity:
  - Optimistic (O)
  - Pessimistic (P)
  - Most Likely (M)

CPM
requires only a one time estimate per activity. This method uses only a Most Likely time estimate (M).

PERT
uses the distribution's mean to determine individual activity duration. Specifically, the PERT formula is

$$(P + 4M + O) / 6$$

PERT and CPM

- For the activity “1” the following estimates are determined:
  - (O) Optimistic estimate = 6 days
  - (P) Pessimistic estimate = 18 days
  - (M) Most Likely = 9 days
- Using PERT, the following estimate is derived: (18 + 36 + 6) / 6 = 10 days.
- Using CPM, the estimate is 9 days.

Legend

Time Estimates
- Optimistic (O)
- Pessimistic (P)
- Most Likely (M)

CPM = Most Likely time estimate
PERT = the distribution’s mean: (P + 4M + O) / 6

Example 1- Koll Business Center

KOLL BUSINESS CENTER County Engineers Design Department			
Activity	**Description**	**Preceding Activity**	**Activity Time**
A	Application approval	None	5
B	Construction plans	A	15
C	Traffic study	A	10
D	Service availability check	A	5
E	Staff report	B, C	15
F	Commission approval	B, C, D	10
G	Wait for construction	F	170
H	Occupancy	E, G	35

Example 1

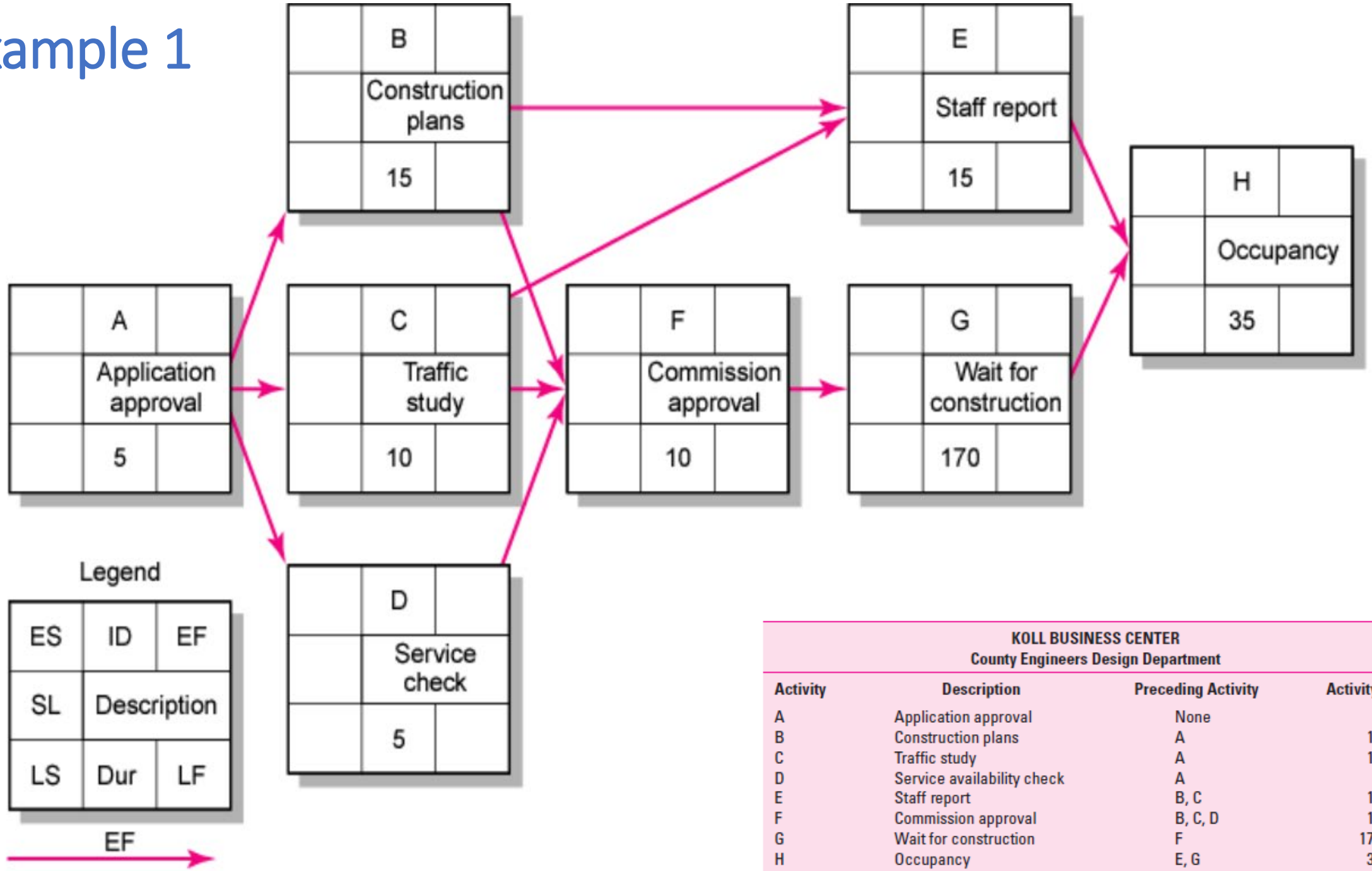

KOLL BUSINESS CENTER
County Engineers Design Department

Activity	Description	Preceding Activity	Activity Time
A	Application approval	None	5
B	Construction plans	A	15
C	Traffic study	A	10
D	Service availability check	A	5
E	Staff report	B, C	15
F	Commission approval	B, C, D	10
G	Wait for construction	F	170
H	Occupancy	E, G	35

Network Computation Process

- Forward Pass—Earliest Times
  - How soon can the activity start? (early start—ES)
  - How soon can the activity finish? (early finish—EF)
  - How soon can the project finish? (expected time—ET)
- Backward Pass—Latest Times
  - How late can the activity start? (late start—LS)
  - How late can the activity finish? (late finish—LF)
  - Which activities represent the critical path?
  - How long can activity be delayed? (slack or float—SL)

Forward Pass Computation

- Add activity times along each path in the network (EF = ES + Duration)
- Carry the early finish (EF) to the next activity where it becomes its early start (ES)

  unless…

- The next succeeding activity is a merge activity, in which case the largest EF of all receding activities is selected

Backward Pass Computation

- Subtract activity times along each path in the network (LS = LF - Duration)
- Carry the late start (LS) to the next activity where it becomes its late finish (LF)

  unless…

- The next succeeding activity is a burst activity, in which case the smallest LF of all preceding activities is selected.

Slack (or Float)

- Slack (SL) or Total Slack (TS) tells us the amount of time an activity can be delayed and not delay the project. Stated differently, total slack is the amount of time an activity can exceed its early finish date without affecting the project end date or an imposed completion date
  - SL = LS - ES or
  - SL = LF – EF
- Free Slack/Floatis (FS) unique. It is the amount of time an activity can be delayed without delaying any immediately following (successor) activity. Or free slack is the amount of time an activity can exceed its early finish date without affecting the early start date of any successor(s)
- $FS = ES_{successor} - EF$

Example 1

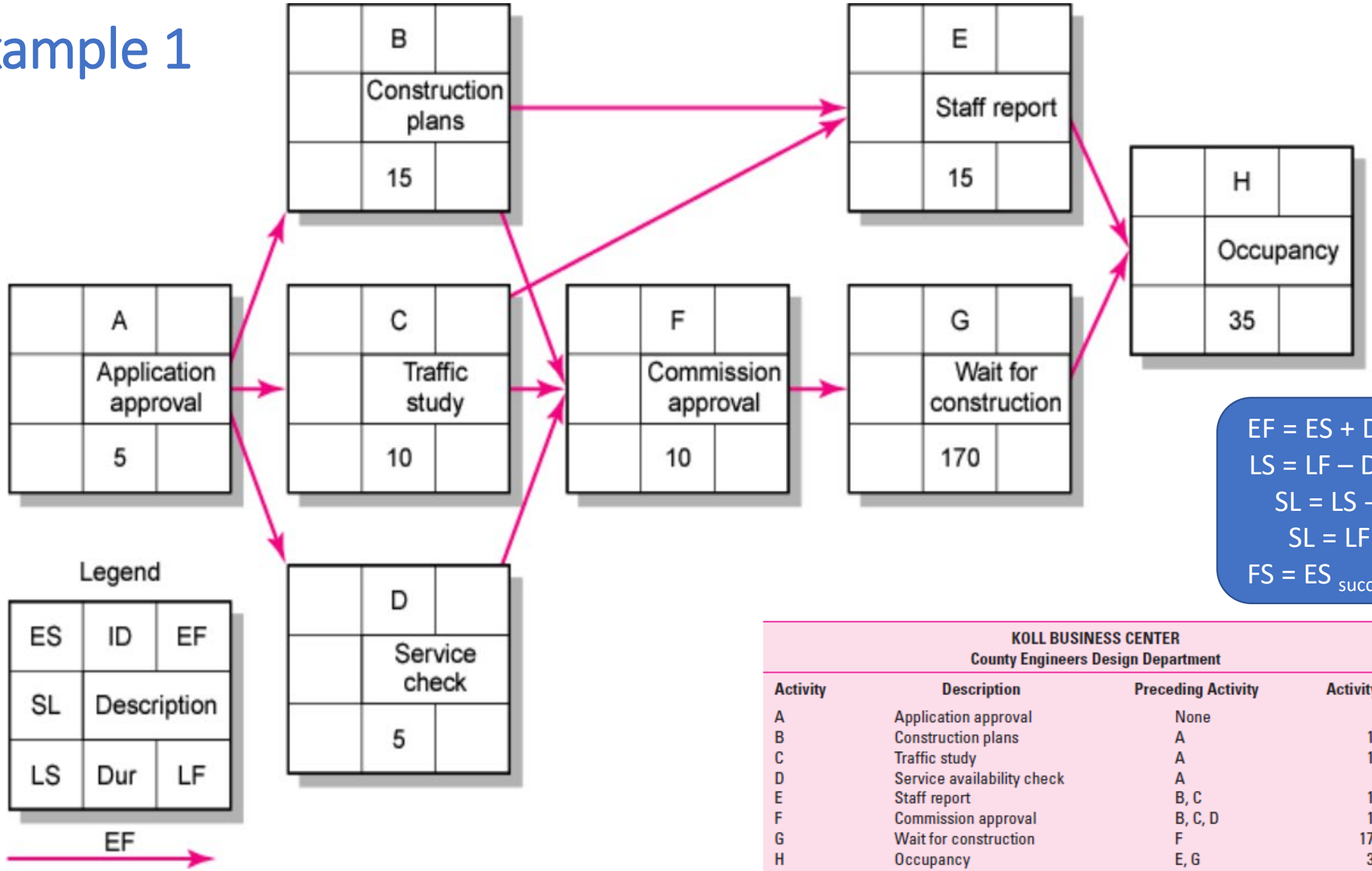

EF = ES + Duration
LS = LF – Duration
SL = LS - ES or
SL = LF – EF
FS = ES $_{\text{successor}}$ - EF

KOLL BUSINESS CENTER
County Engineers Design Department

Activity	Description	Preceding Activity	Activity Time
A	Application approval	None	5
B	Construction plans	A	15
C	Traffic study	A	10
D	Service availability check	A	5
E	Staff report	B, C	15
F	Commission approval	B, C, D	10
G	Wait for construction	F	170
H	Occupancy	E, G	35

Example 1

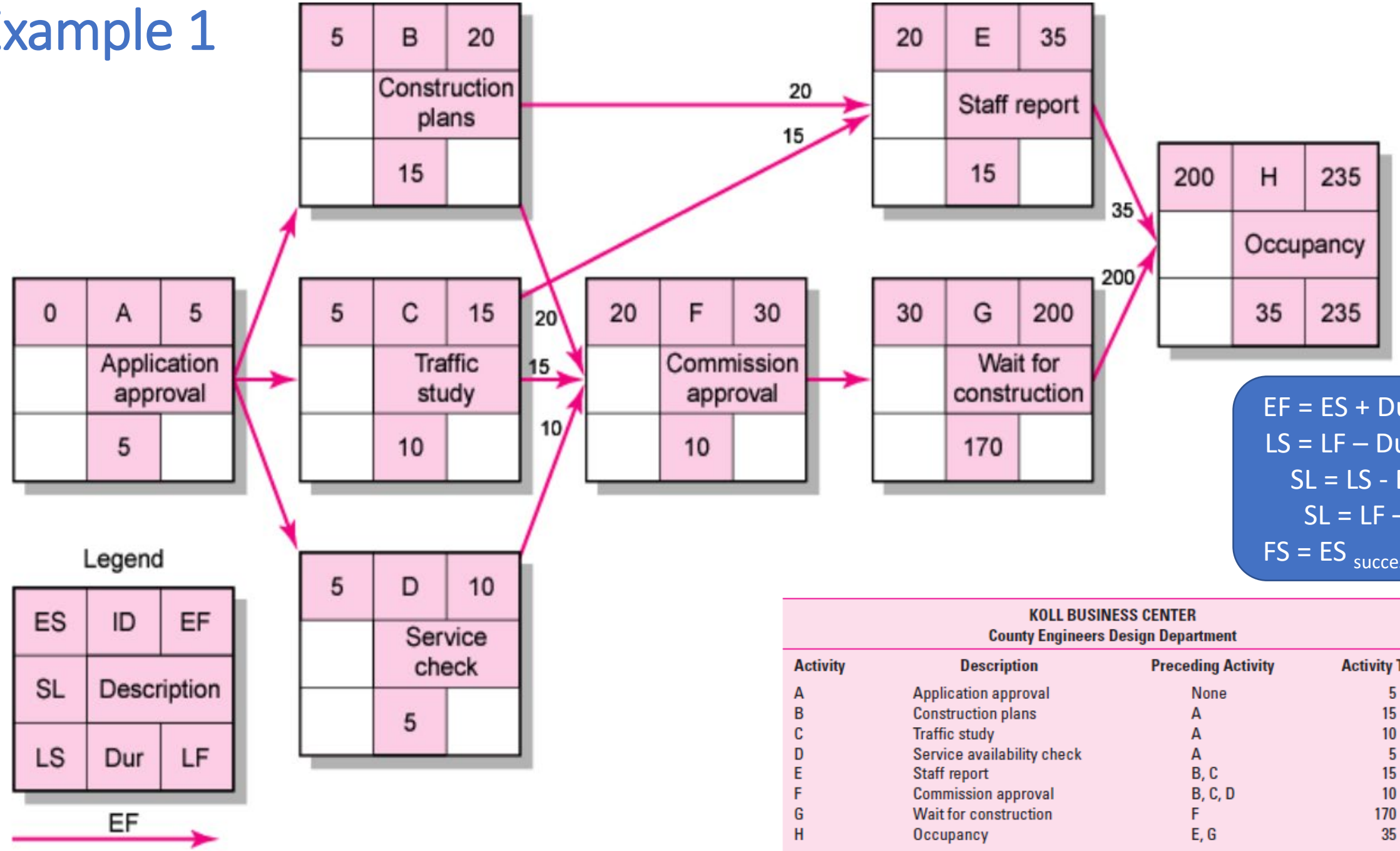

EF = ES + Duration
LS = LF – Duration
SL = LS - ES or
SL = LF – EF
FS = ES $_{\text{successor}}$ - EF

KOLL BUSINESS CENTER
County Engineers Design Department

Activity	Description	Preceding Activity	Activity Time
A	Application approval	None	5
B	Construction plans	A	15
C	Traffic study	A	10
D	Service availability check	A	5
E	Staff report	B, C	15
F	Commission approval	B, C, D	10
G	Wait for construction	F	170
H	Occupancy	E, G	35

Example 1

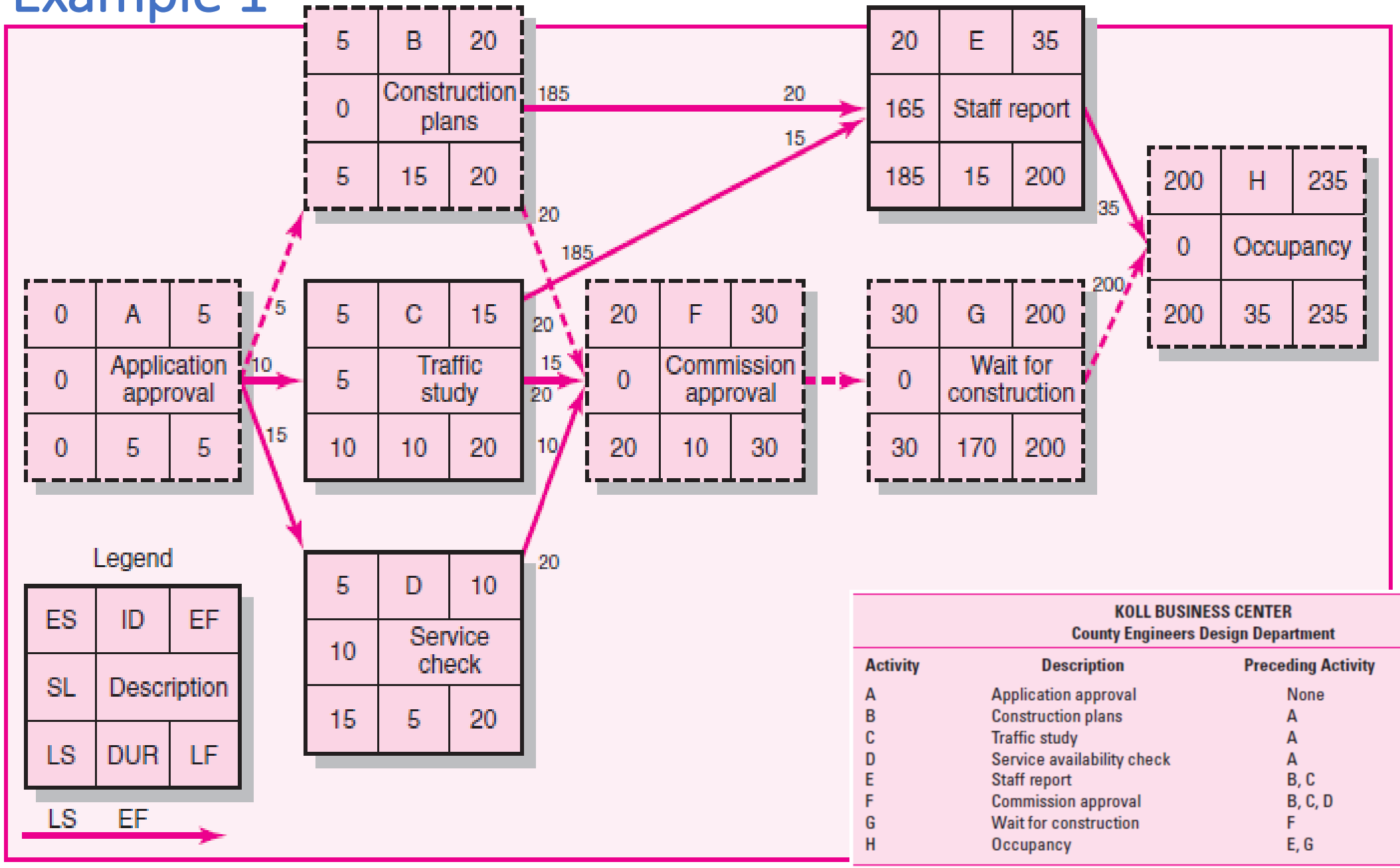

EF = ES + Duration
LS = LF – Duration
SL = LS - ES or
SL = LF – EF
FS = ES $_{\text{successor}}$ - EF

KOLL BUSINESS CENTER
County Engineers Design Department

Activity	Description	Preceding Activity	Activity Time
A	Application approval	None	5
B	Construction plans	A	15
C	Traffic study	A	10
D	Service availability check	A	5
E	Staff report	B, C	15
F	Commission approval	B, C, D	10
G	Wait for construction	F	170
H	Occupancy	E, G	35

Critical Path

- Path: a sequence of connected, dependent activities.
- Critical Path: the longest path through the activity network that where all the activities has no Slack (float)
- There could be more than one critical path in the project
- The Critical Path tells management the activities that are critical or essential in completing the project on time.
- It is also important for management to look at activities with minor float because any delays in those activities could cause them to be on the critical path.

Example 1

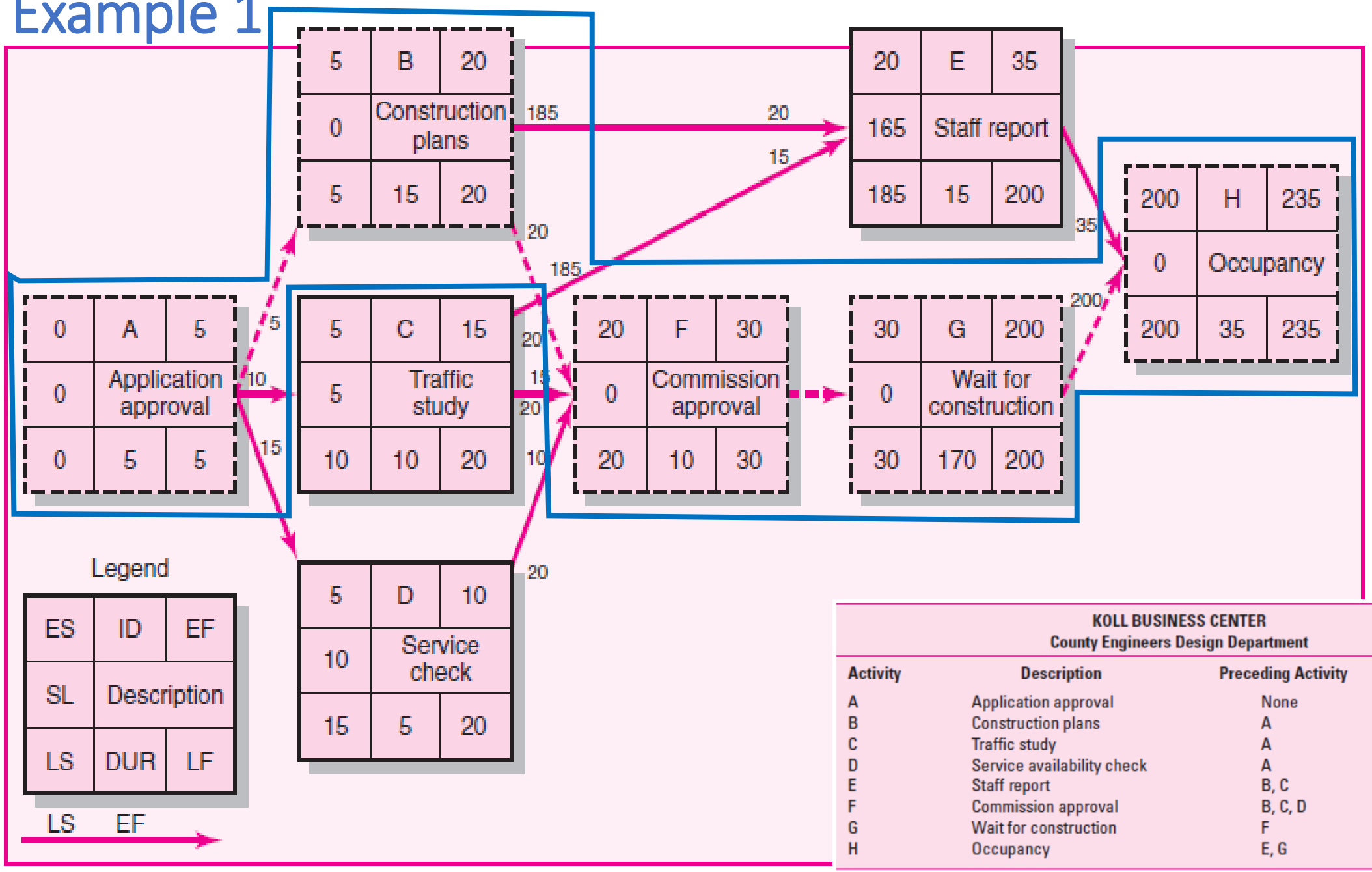

EF = ES + Duration
LS = LF – Duration
SL = LS - ES or
SL = LF – EF
FS = ES $_{\text{successor}}$ - EF

KOLL BUSINESS CENTER
County Engineers Design Department

Activity	Description	Preceding Activity	Activity Time
A	Application approval	None	5
B	Construction plans	A	15
C	Traffic study	A	10
D	Service availability check	A	5
E	Staff report	B, C	15
F	Commission approval	B, C, D	10
G	Wait for construction	F	170
H	Occupancy	E, G	35

Example 1 - Koll Business Center

			Koll Business Center					
Activity	**Description**	**Preceding Activity**	**Earliest Start Es**	**Earliest Finish EF**	**Late Start LS**	**Late Finish LF**	**Slack LS – ES**	**On Critical Path**
A	Application approval	-	0	5	0	5	0	Yes
B	Construction plans	A	5	20	5	20	0	Yes
C	Traffic study	A	5	15	10	20	5	No
D	Service Check	A	5	10	15	20	10	No
E	Staff report	B, C	20	35	185	200	156	No
F	Commission Approval	B, C, D	20	30	20	30	0	Yes
G	Wait for Construction	F	30	200	30	200	0	Yes
H	Occupancy	E, G	200	235	200	235	0	Yes

Activities with zero slack are on the critical path. It:

- Starts at the first activity in the project
- Terminates at the last activity in the project
- Includes only critical activities

Critical Path: A – B – F – G – H

Project Duration: 235 days

Calendar Dates

- Ultimately you will want to assign calendar dates to your project activities
- If a computer program is not used, dates are assigned manually. Lay out a calendar of workdays (exclude nonwork days) and number them. Then relate the calendar workdays to the workdays on your project network.
- Most computer programs will assign calendar dates automatically after you identify start dates, time units, non workdays, and other information.

ID	Duration	Task Name	Start	Finish	Late Start	Late Finish	Free Slack	Total Slack
1	2 days	Order review	Tue 1/1	Wed 1/2	Tue 1/1	Wed 1/2	0 days	0 days
2	15 days	Order vendor parts	Thu 1/3	Thu 1/17	Wed 1/16	Wed 1/30	13 days	13 days
3	10 days	Produce other standard parts	Thu 1/3	Sat 1/12	Mon 1/21	Wed 1/30	18 days	18 days
4	13 days	Design custom parts	Thu 1/3	Tue 1/15	Thu 1/3	Tue 1/15	0 days	0 days
5	18 days	Software development	Thu 1/3	Sun 1/20	Wed 1/23	Sat 2/9	20 days	20 days
6	15 days	Manufacture custom hardware	Wed 1/16	Wed 1/30	Wed 1/16	Wed 1/30	0 days	0 days
7	10 days	Assemble	Thu 1/31	Sat 2/9	Thu 1/31	Sat 2/9	0 days	0 days
8	5 days	Test	Sun 2/10	Thu 2/14	Sun 2/10	Thu 2/14	0 days	0 days

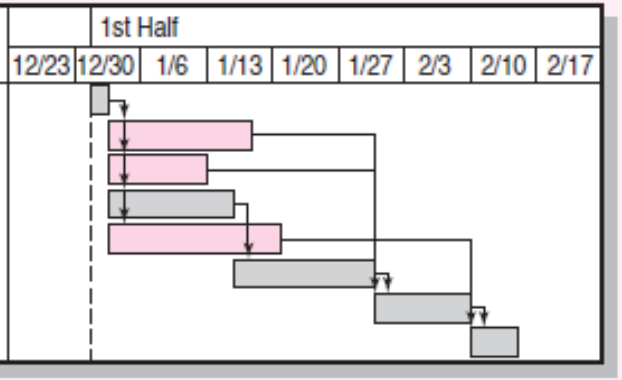

Calendar Dates

			Koll Business Center					
Activity	Description	Preceding Activity	Earliest Start Es	Earliest Finish EF	Late Start LS	Late Finish LF	Slack LS – ES	On Critical Path
A	Application approval	-	0	5	0	5	0	Yes
B	Construction plans	A	5	20	5	20	0	Yes
C	Traffic study	A	5	15	10	20	5	No
D	Service Check	A	5	10	15	20	10	No
E	Staff report	B, C	20	35	185	200	156	No
F	Commission Approval	B, C, D	20	30	20	30	0	Yes
G	Wait for Construction	F	30	200	30	200	0	Yes
H	Occupancy	E, G	200	235	200	235	0	Yes

Extended Network Techniques to Come Closer to Reality

Laddering

- Activities are broken into segments so the following activity can begin sooner and not delay the work

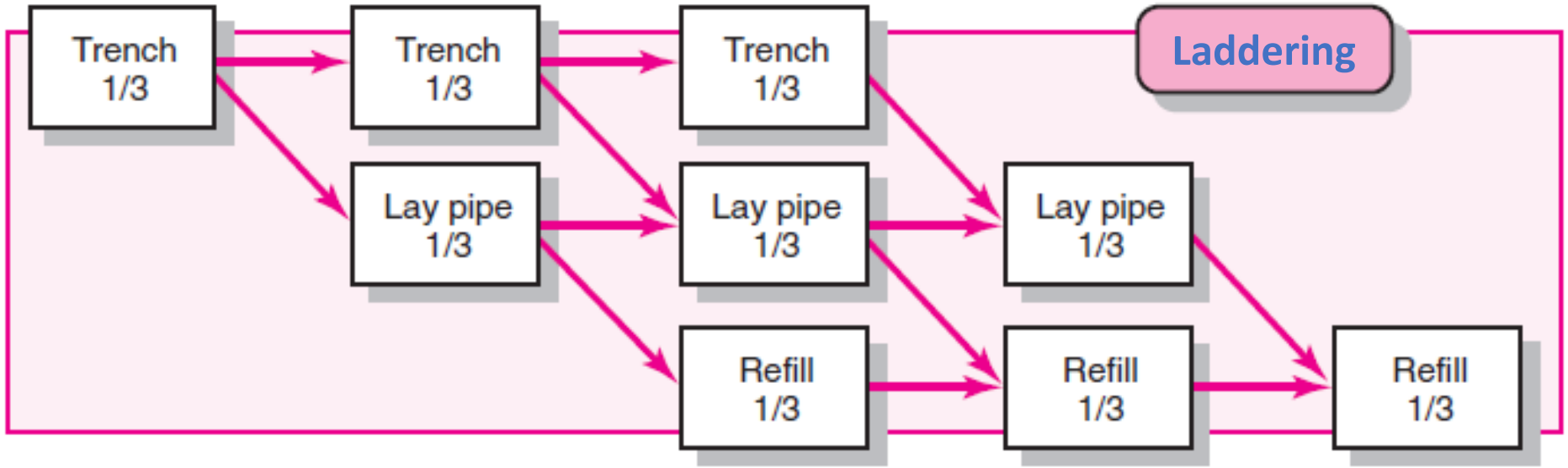

Lags

- The minimum amount of time a dependent activity must be delayed to begin or end
- The use of lags in project networks occurs for two primary reasons:

1. When activities of long duration delay the start or finish of successor activities, the network designer normally breaks the activity into smaller activities to avoid the long delay of the successor activity. Use of lags can avoid such delays and reduce network detail
2. Lags can be used to constrain the start and finish of an activity

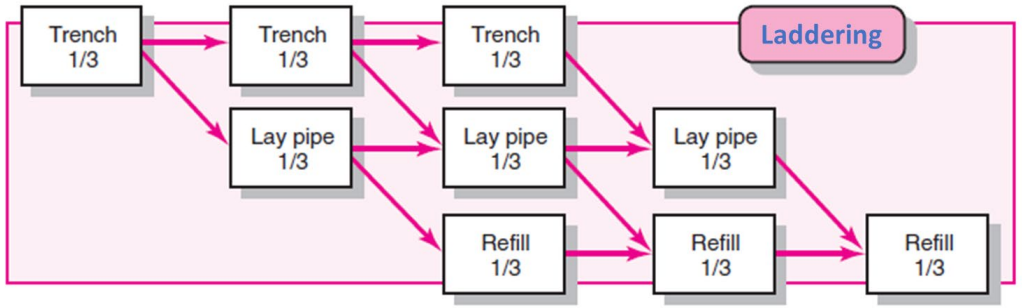

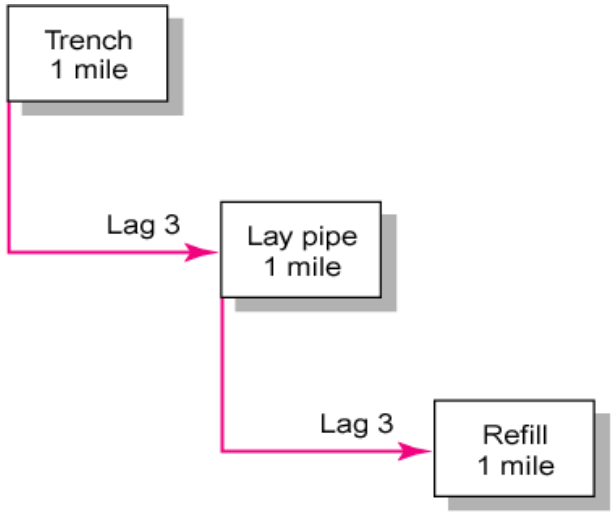

Network Using Lags

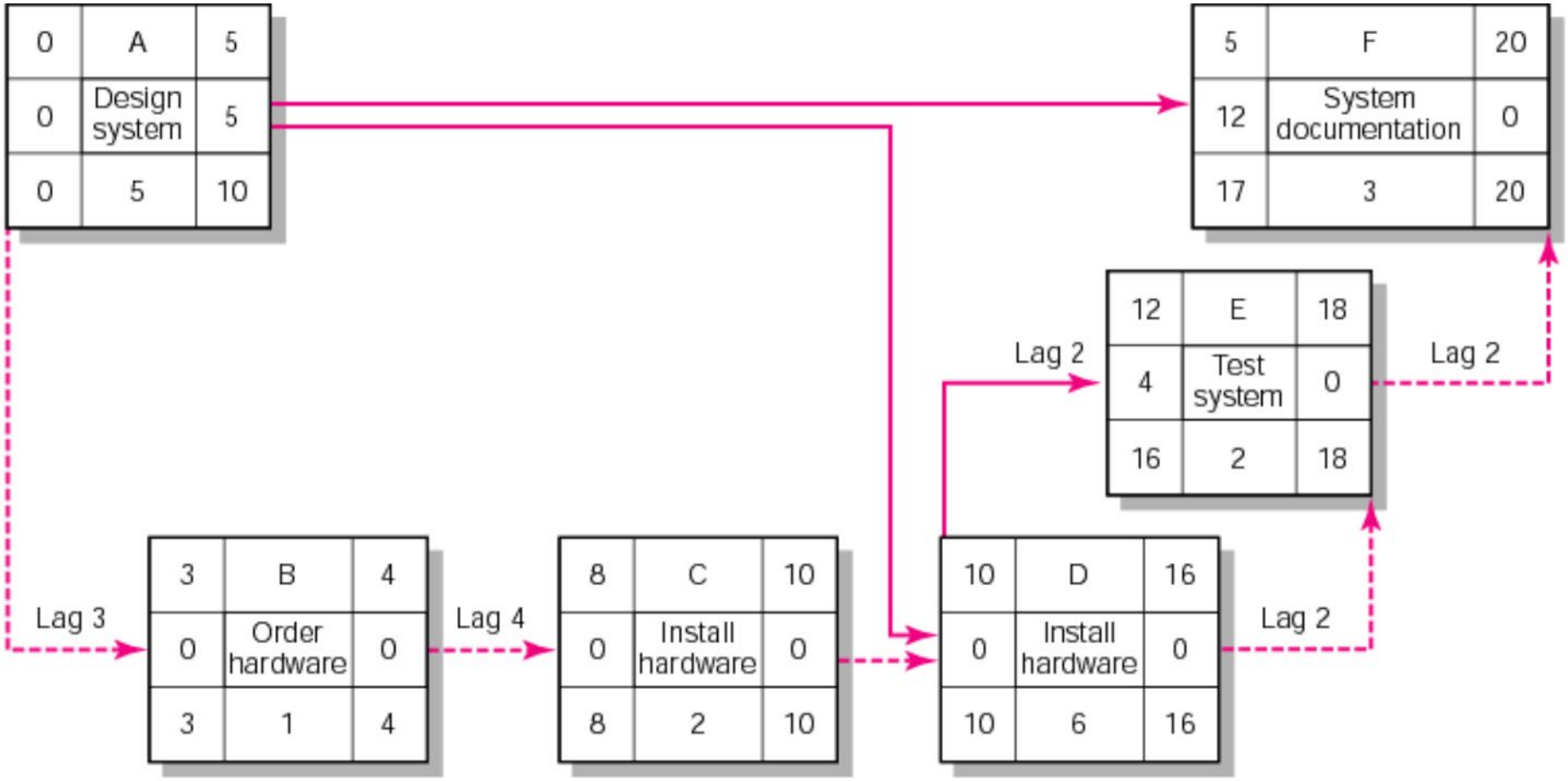

Legend

ES	ID	EF
SL	Description	SL
LS	Duration	LF

Example 2 - Milwaukee Paper's Project

	Time Estimates (in weeks) for Milwaukee Paper's Project					
Activity	**Predecessors**	**Optimistic** ***O***	**Most Likely** ***M***	**Pessimistic** ***P***	**Expected Time** $D = (P + 4M + O)/6$	**Variance** $[(P - O)/6]^2$
A	—	1	2	3	(1 + 4*2 + 3)/6 = 2	.11
B	—	2	3	4	3	.11
C	A	1	2	3	2	.11
D	A, B	2	4	6	4	.44
E	C	1	4	7	4	1.00
F	C	1	2	9	3	1.78
G	D, E	3	4	11	5	1.78
H	F, G	1	2	3	2	.11

ES/EF Network for Milwaukee Paper

	Time Estimates for Milwaukee Paper Manufacturing		
ACTIVITY	DESCRIPTION	PREDECESSORS	TIME (WEEKS)
A	Build internal components	—	2
B	Modify roof and floor	—	3
C	Construct collection stack	A	2
D	Pour concrete and install frame	A, B	4
E	Build high-temperature burner	C	4
F	Install pollution control system	C	3
G	Install air pollution device	D, E	5
H	Inspect and test	F, G	2

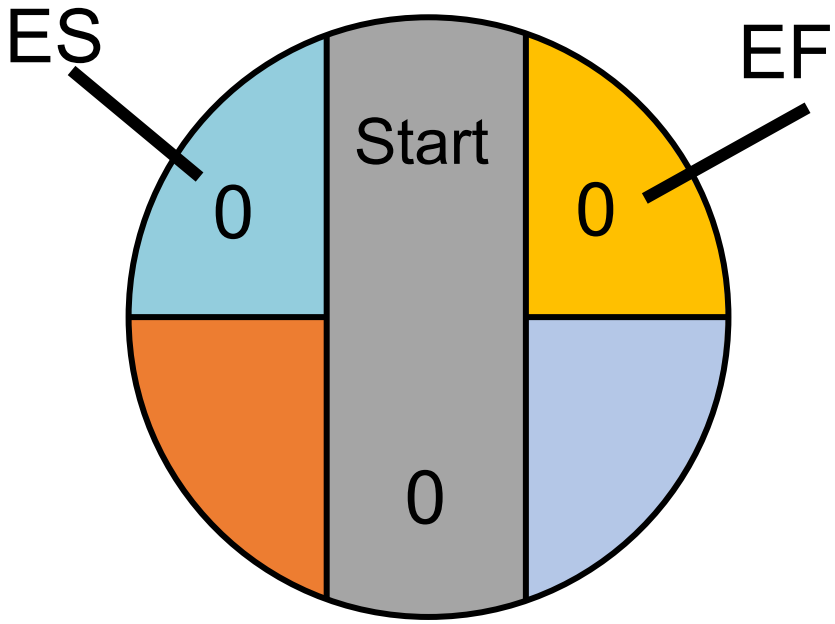

EF = ES + Activity time

ES/EF Network for Milwaukee Paper

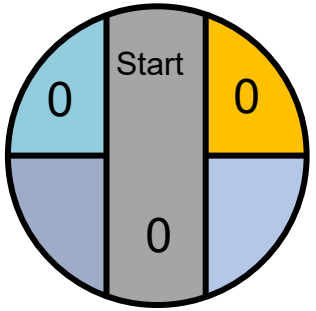

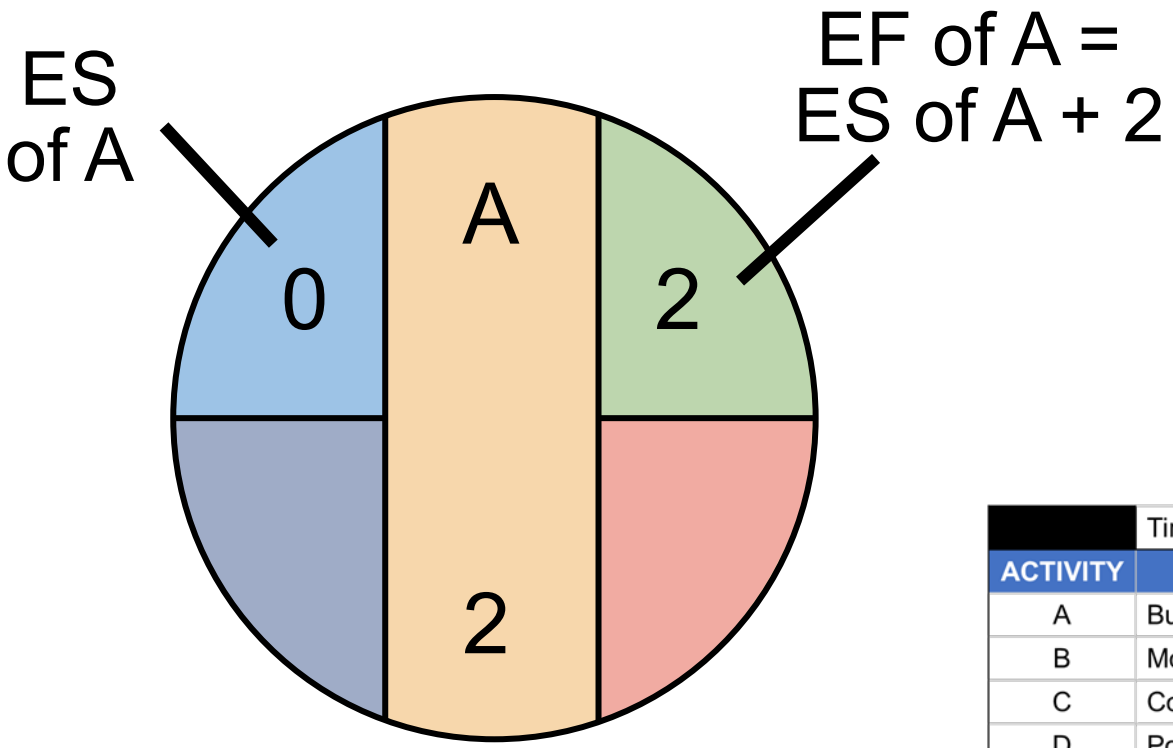

	Time Estimates for Milwaukee Paper Manufacturing		
ACTIVITY	DESCRIPTION	PREDECESSORS	TIME (WEEKS)
A	Build internal components	—	2
B	Modify roof and floor	—	3
C	Construct collection stack	A	2
D	Pour concrete and install frame	A, B	4
E	Build high-temperature burner	C	4
F	Install pollution control system	C	3
G	Install air pollution device	D, E	5
H	Inspect and test	F, G	2

ES/EF Network for Milwaukee Paper

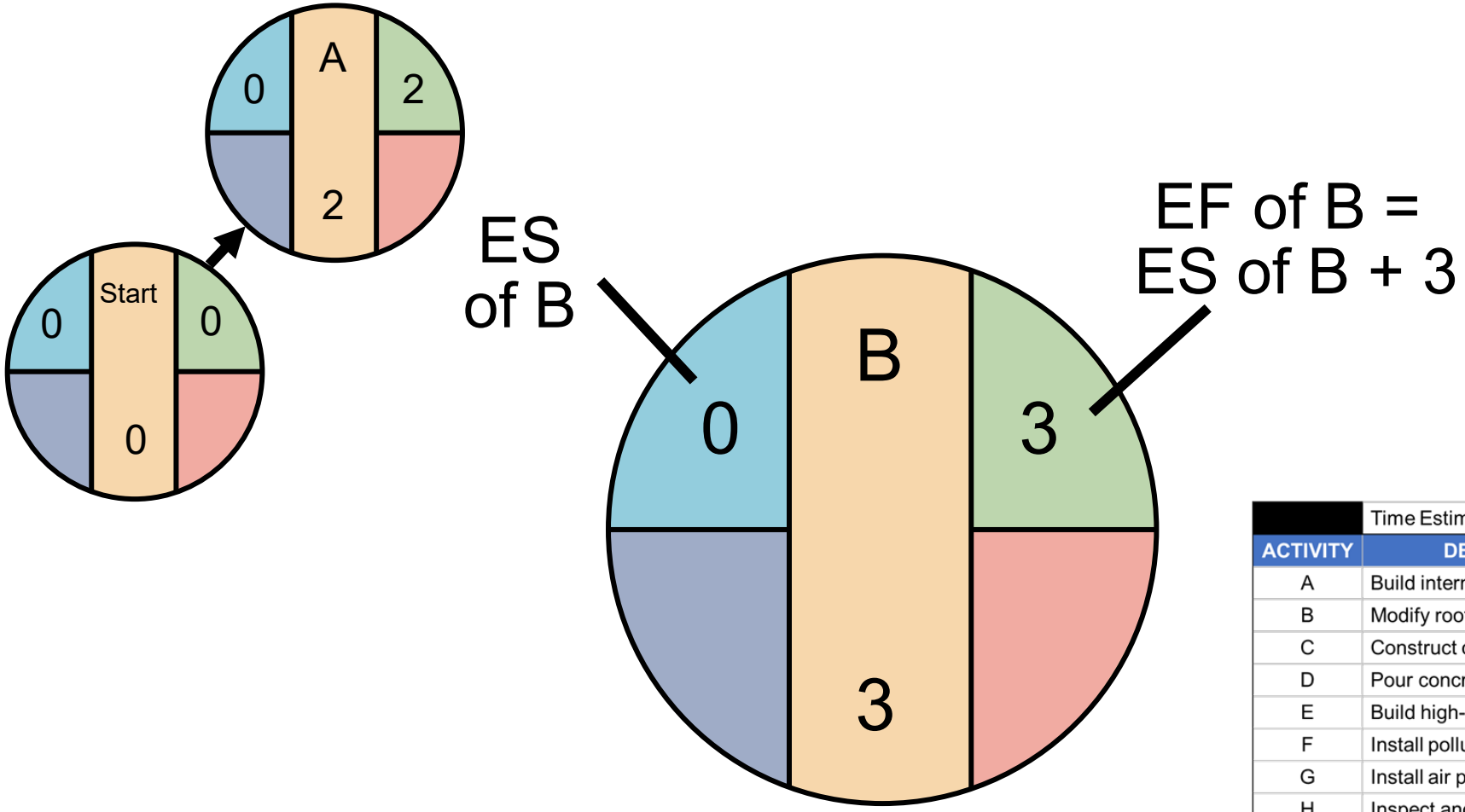

	Time Estimates for Milwaukee Paper Manufacturing		
ACTIVITY	DESCRIPTION	PREDECESSORS	TIME (WEEKS)
A	Build internal components	—	2
B	Modify roof and floor	—	3
C	Construct collection stack	A	2
D	Pour concrete and install frame	A, B	4
E	Build high-temperature burner	C	4
F	Install pollution control system	C	3
G	Install air pollution device	D, E	5
H	Inspect and test	F, G	2

ES/EF Network for Milwaukee Paper

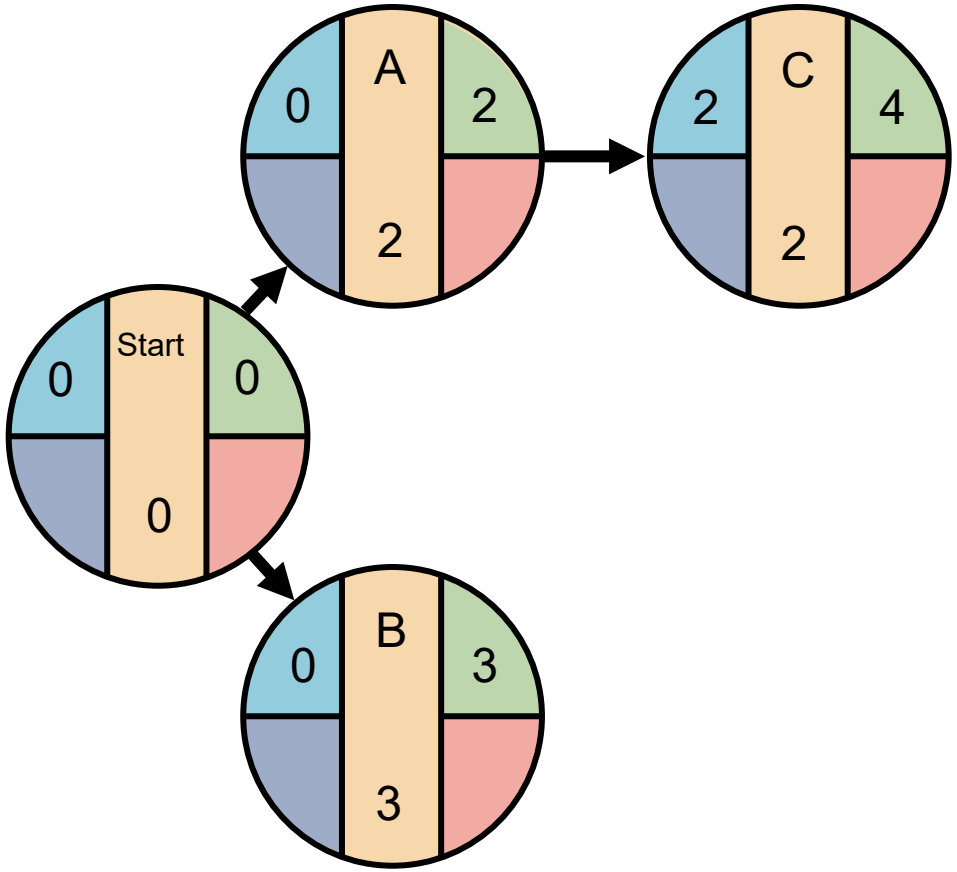

	Time Estimates for Milwaukee Paper Manufacturing		
ACTIVITY	DESCRIPTION	PREDECESSORS	TIME (WEEKS)
A	Build internal components	—	2
B	Modify roof and floor	—	3
C	Construct collection stack	A	2
D	Pour concrete and install frame	A, B	4
E	Build high-temperature burner	C	4
F	Install pollution control system	C	3
G	Install air pollution device	D, E	5
H	Inspect and test	F, G	2

ES/EF Network for Milwaukee Paper

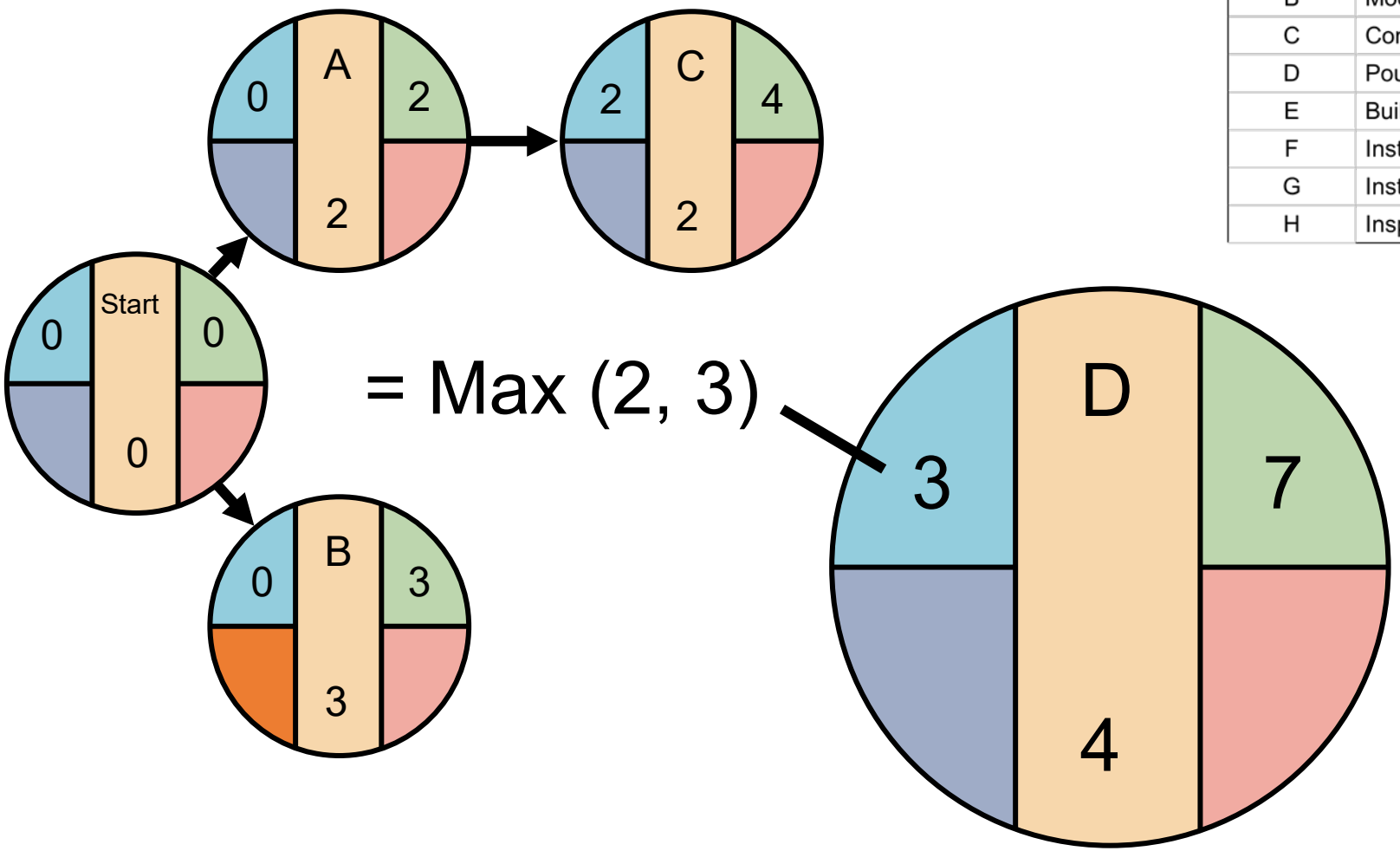

	Time Estimates for Milwaukee Paper Manufacturing		
ACTIVITY	DESCRIPTION	PREDECESSORS	TIME (WEEKS)
A	Build internal components	—	2
B	Modify roof and floor	—	3
C	Construct collection stack	A	2
D	Pour concrete and install frame	A, B	4
E	Build high-temperature burner	C	4
F	Install pollution control system	C	3
G	Install air pollution device	D, E	5
H	Inspect and test	F, G	2

ES/EF Network for Milwaukee Paper

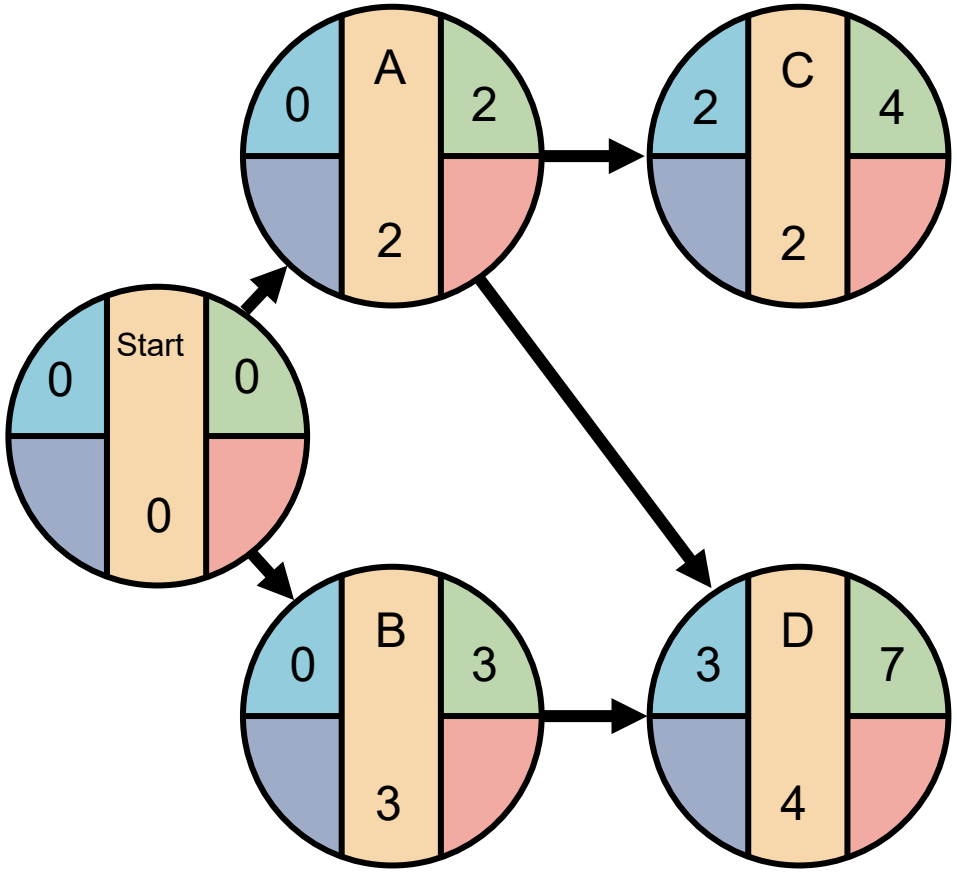

	Time Estimates for Milwaukee Paper Manufacturing		
ACTIVITY	DESCRIPTION	PREDECESSORS	TIME (WEEKS)
A	Build internal components	—	2
B	Modify roof and floor	—	3
C	Construct collection stack	A	2
D	Pour concrete and install frame	A, B	4
E	Build high-temperature burner	C	4
F	Install pollution control system	C	3
G	Install air pollution device	D, E	5
H	Inspect and test	F, G	2

ES/EF Network for Milwaukee Paper

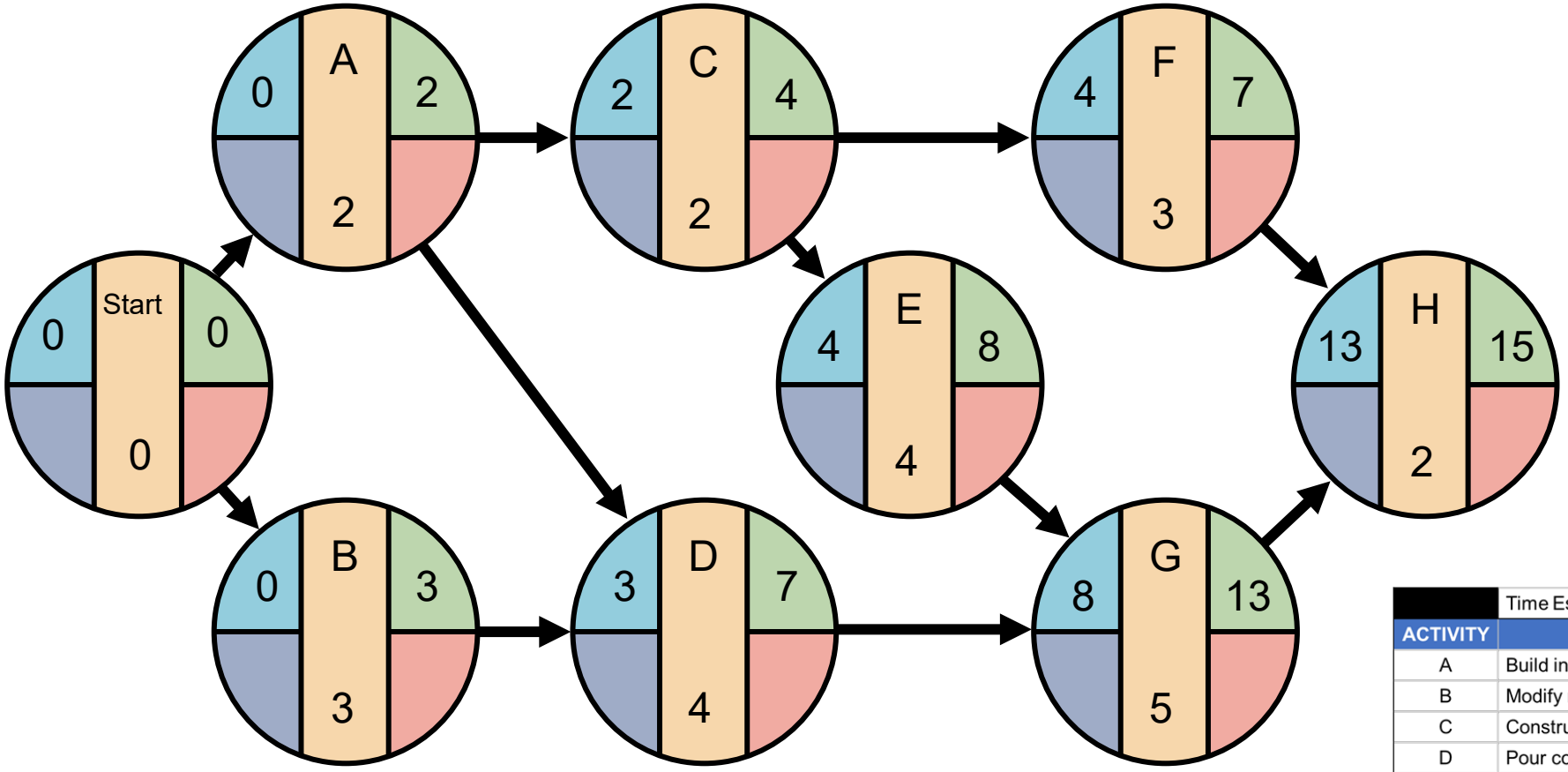

	Time Estimates for Milwaukee Paper Manufacturing		
ACTIVITY	DESCRIPTION	PREDECESSORS	TIME (WEEKS)
A	Build internal components	—	2
B	Modify roof and floor	—	3
C	Construct collection stack	A	2
D	Pour concrete and install frame	A, B	4
E	Build high-temperature burner	C	4
F	Install pollution control system	C	3
G	Install air pollution device	D, E	5
H	Inspect and test	F, G	2

LS/LF Times for Milwaukee Paper

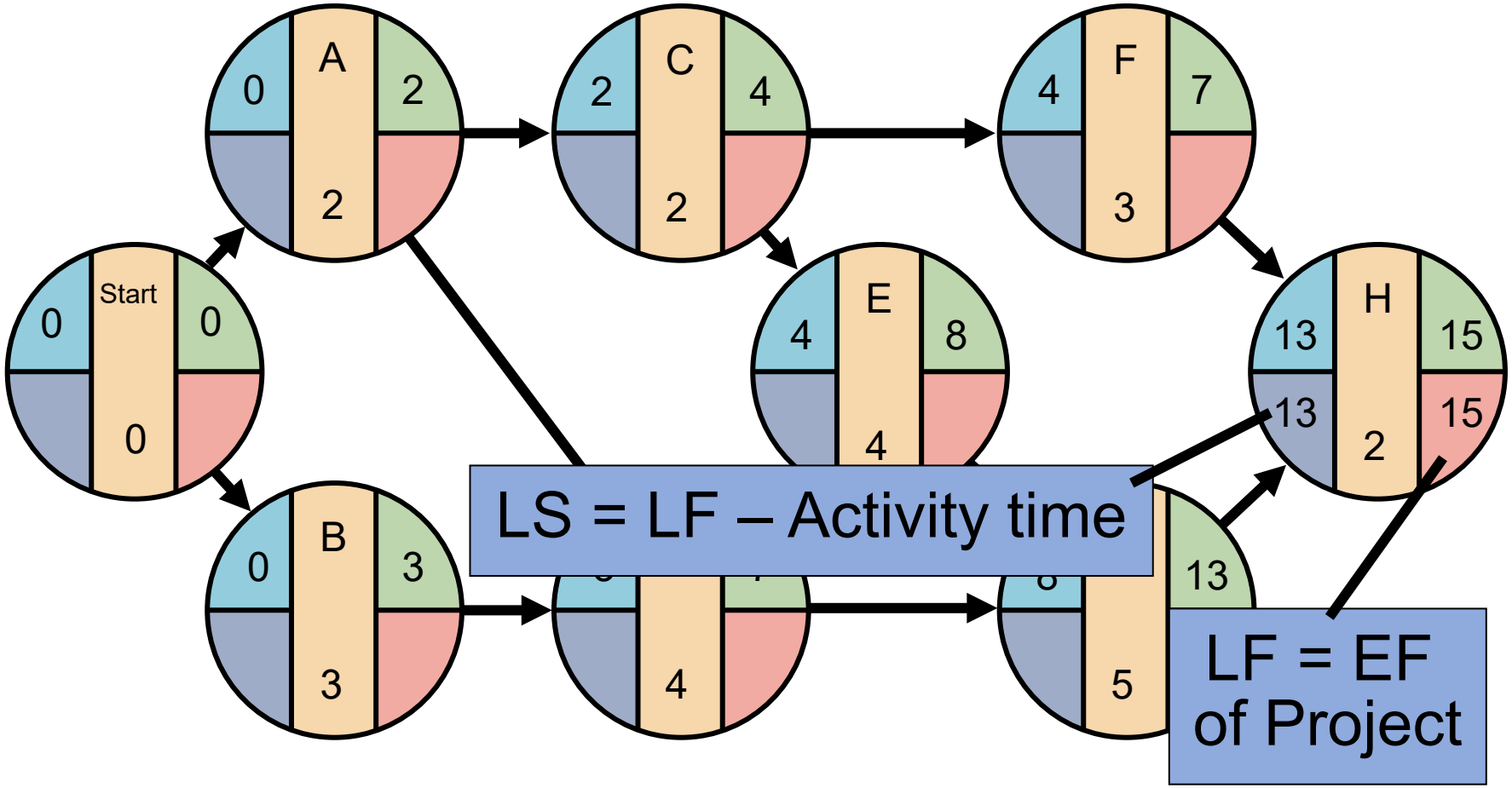

LS/LF Times for Milwaukee Paper

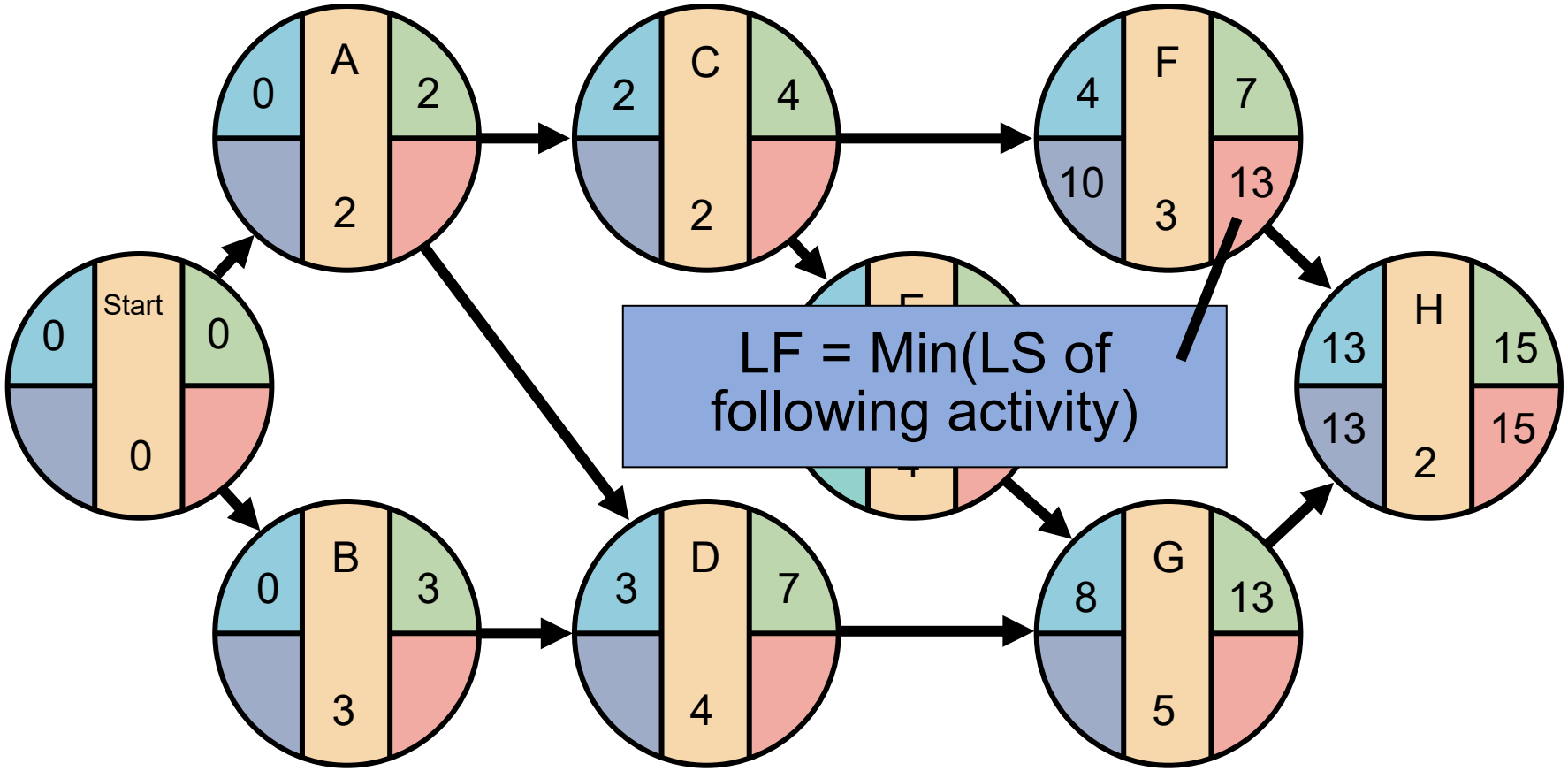

LS/LF Times for Milwaukee Paper

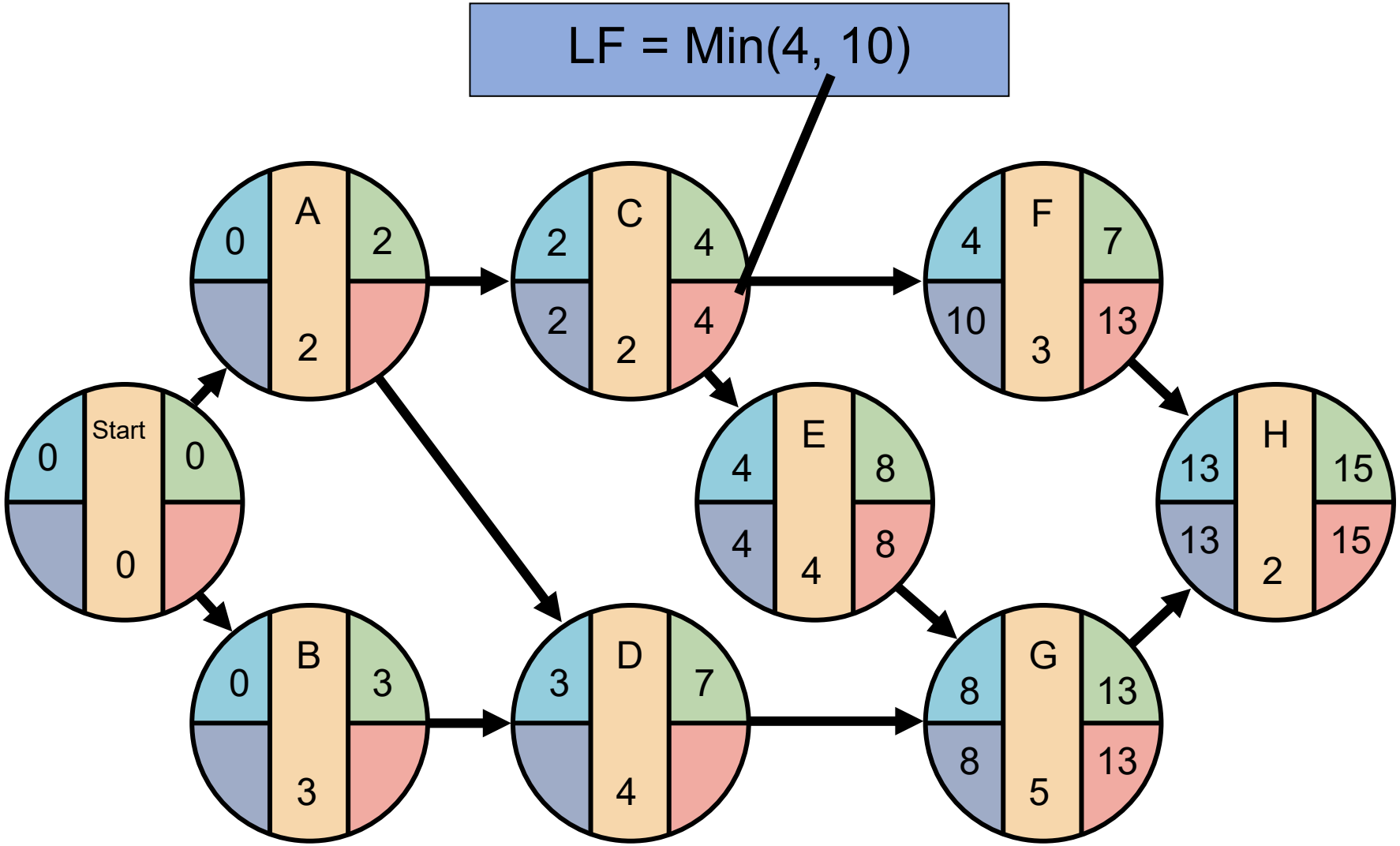

LS/LF Times for Milwaukee Paper

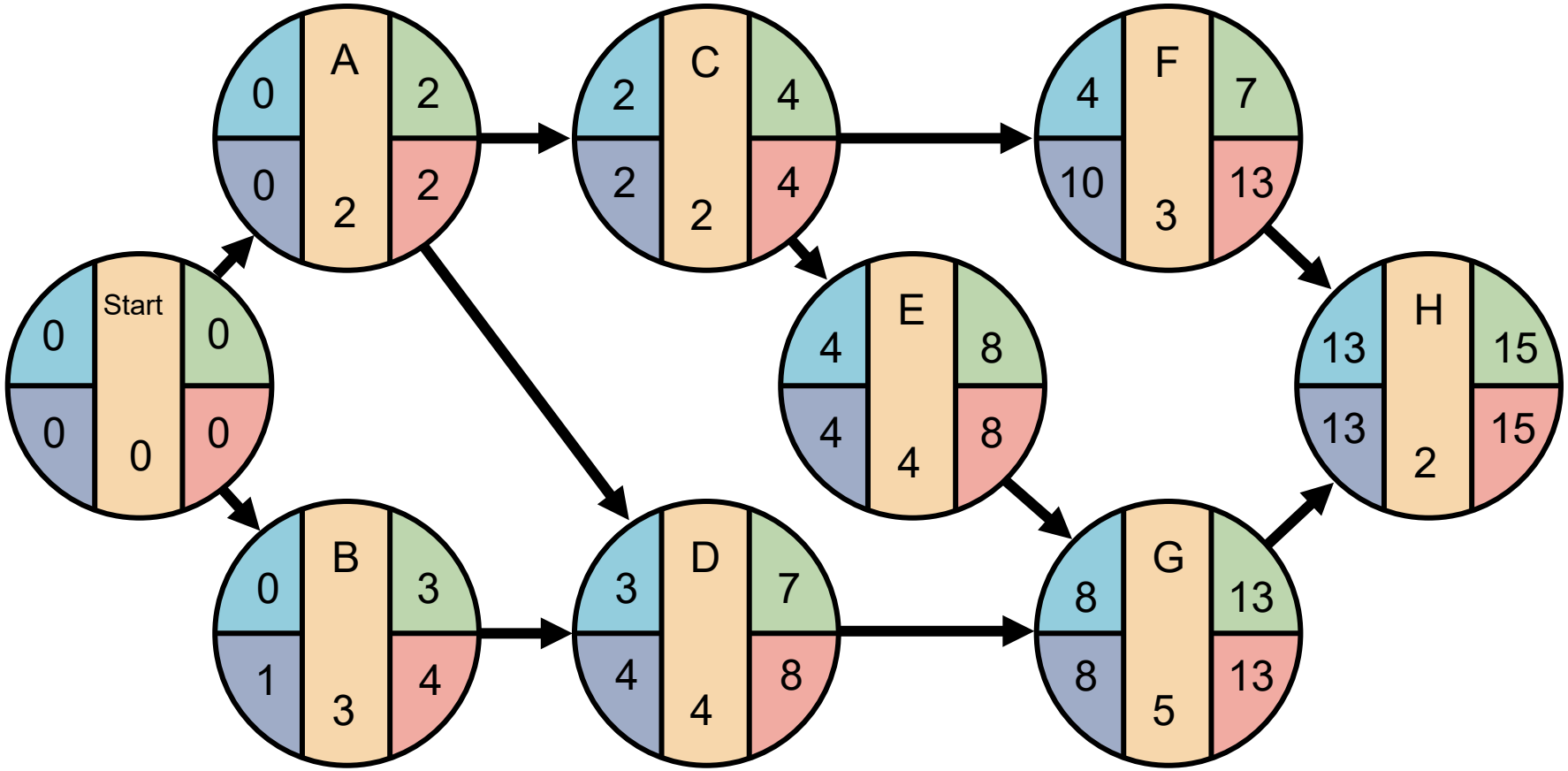

Computing Slack Time

Milwaukee Paper's Schedule and Slack Times

Activity	Expected Time	Earliest Start ES	Earliest Finish EF	Latest Start LS	Latest Finish LF	Slack Ls – Es	On Critical Path	Variance
A	2	0	2	0	2	0	Yes	.11
B	3	0	3	1	4	1	No	.11
C	2	2	4	2	4	0	Yes	.11
D	4	3	7	4	8	1	No	.44
E	4	4	8	4	8	0	Yes	1.00
F	3	4	7	10	13	6	No	1.78
G	5	8	13	8	13	0	Yes	1.78
H	2	13	15	13	15	0	Yes	.11

Activities with zero slack are on the critical path. It:

- Starts at the first activity in the project
- Terminates at the last activity in the project
- Includes only critical activities

Critical Path: A – C – E – G – H

Project Duration: 15 days

Project variance

σ^2 = **Project variance**

= $\sum$(**variances of activities on critical path**)

		Milwaukee Paper's Schedule and Slack Times						
Activity	**Expected Time**	**Earliest Start ES**	**Earliest Finish EF**	**Latest Start LS**	**Latest Finish LF**	**Slack Ls – Es**	**On Critical Path**	**Variance**
A	2	0	2	0	2	0	Yes	.11
B	3	0	3	1	4	1	No	.11
C	2	2	4	2	4	0	Yes	.11
D	4	3	7	4	8	1	No	.44
E	4	4	8	4	8	0	Yes	1.00
F	3	4	7	10	13	6	No	1.78
G	5	8	13	8	13	0	Yes	1.78
H	2	13	15	13	15	0	Yes	.11

Critical Path: A – C – E – G – H

Project Duration: 15 days

Project variance

σ_p^2 = .11 + .11 + 1.00 + 1.78 + .11 = 3.11

Project standard deviation

$\sigma_p = \sqrt{\text{Project variance}}$

$= \sqrt{3.11} = 1.76$ weeks

Standard deviation = 1.76 weeks

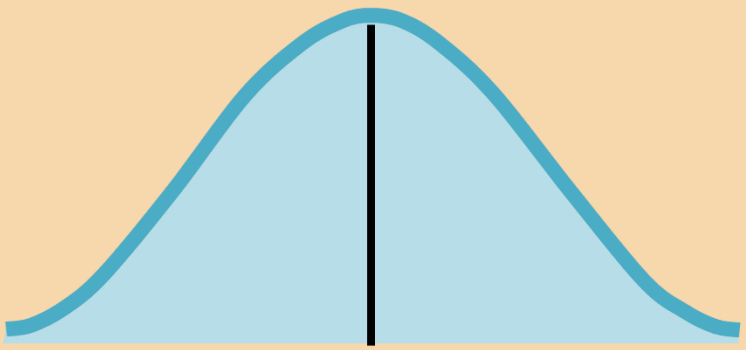

15 Weeks

(Expected Completion Time)

ES – EF Gantt Chart

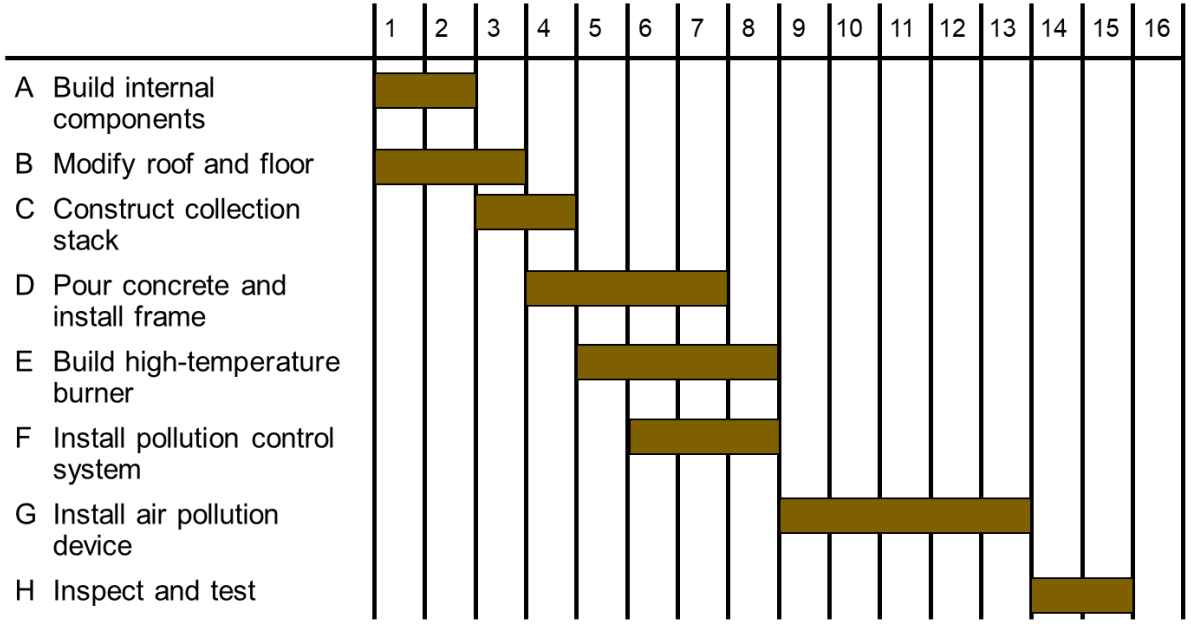

TABLE 3.3 Milwaukee Paper's Schedule and Slack Times

ACTIVITY	EARLIEST START ES	EARLIEST FINISH EF	LATEST START LS	LATEST FINISH LF	SLACK LS – ES	ON CRITICAL PATH
A	0	2	0	2	0	Yes
B	0	3	1	4	1	No
C	2	4	2	4	0	Yes
D	3	7	4	8	1	No
E	4	8	4	8	0	Yes
F	4	7	10	13	6	No
G	8	13	8	13	0	Yes
H	13	15	13	15	0	Yes

LS – LF Gantt Chart

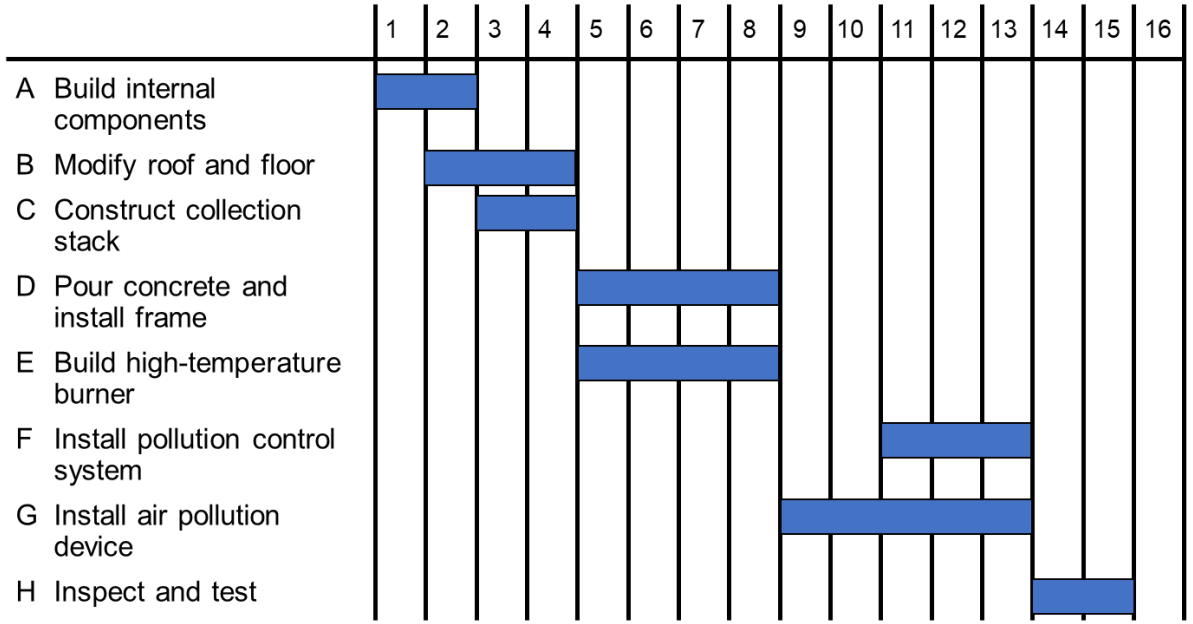

	Time Estimates for Milwaukee Paper Manufacturing		
ACTIVITY	**DESCRIPTION**	**PREDECESSORS**	**TIME (WEEKS)**
A	Build internal components	—	2
B	Modify roof and floor	—	3
C	Construct collection stack	A	2
D	Pour concrete and install frame	A, B	4
E	Build high-temperature burner	C	4
F	Install pollution control system	C	3
G	Install air pollution device	D, E	5
H	Inspect and test	F, G	2
	Total time (weeks)	—	25

Example 3 – Project Delta

Name: Project Delta

Durations are listed in weeks

Activity	Description	Optimistic	Likely	Pessimistic	Predecessors
A	Contract signing	3	4	11	-
B	Questionnaire design	2	5	8	A
C	Target market ID	3	6	9	A
D	Survey sample	8	12	20	B, C
E	Develop presentation	3	5	12	B
F	Analyze results	2	4	7	D
G	Demographic analysis	6	9	14	C
H	Presentation to client	1	2	4	E, F, G

Example 3 – Project Delta

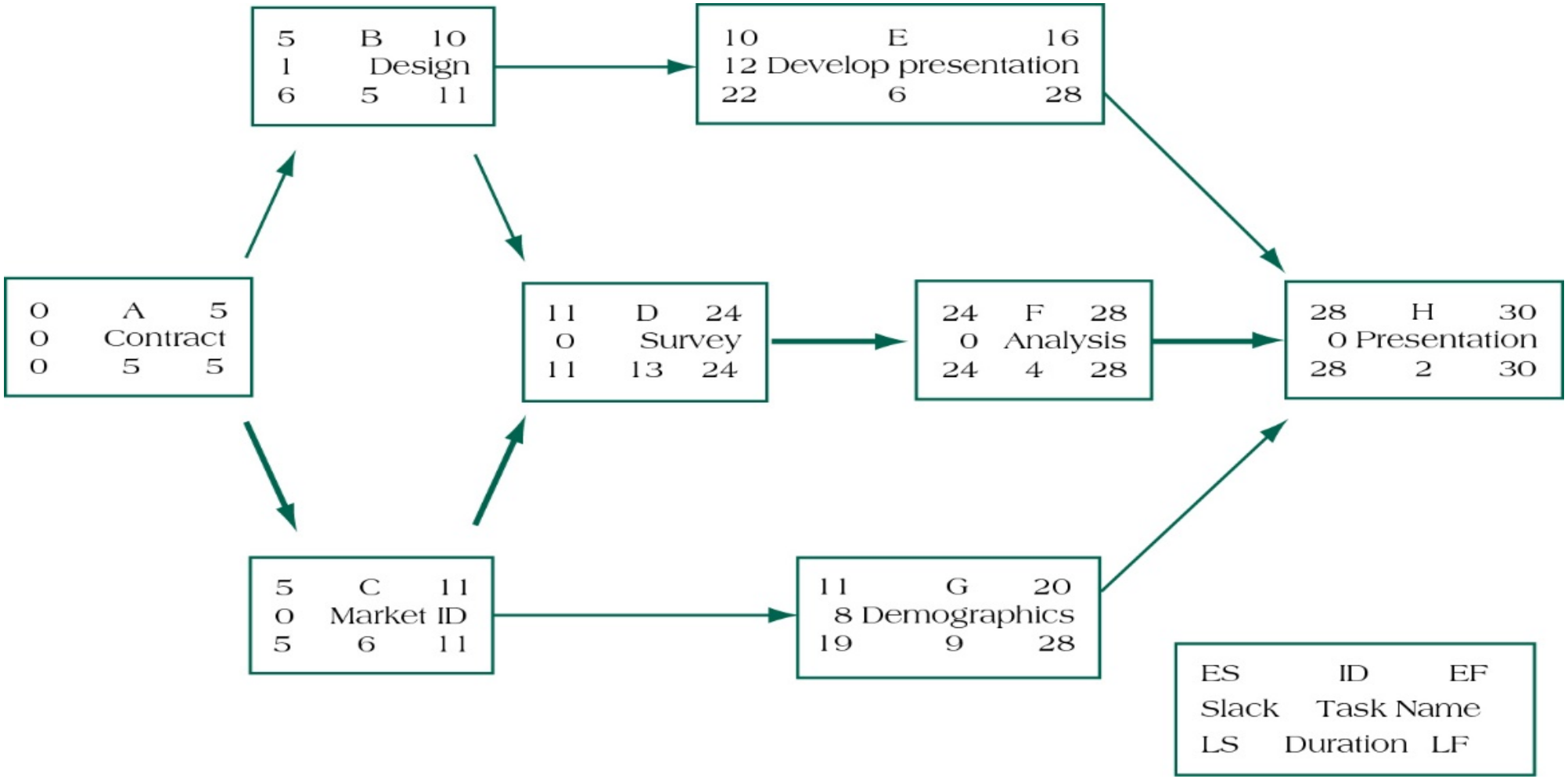

جامعة الجميع الذكية

EVERYONE`S SMART UNIVERSITY

Summary of Today Session

8 Basic Rules to Follow in Developing Project Networks

1. Networks flow typically from left to right
2. An activity cannot begin until all preceding connected activities have been completed
3. Arrows on networks indicate precedence and flow. Arrows can cross over each other
4. Each activity should have a unique identification number
5. An activity identification number must be larger than that of any activities that precede it
6. Looping is not allowed (in other words, recycling through a set of activities cannot take place)
7. Conditional statements are not allowed (If successful, do something; if not, do nothing)
8. When there are multiple starts, a common start node can be used to indicate a clear project beginning on the network. (A single project end node can be used to indicate a clear ending)

Gantt Chart

- ✓ Establish a ***time-phased network***
- ✓ Can be used as a ***tracking tool***

<u>Benefits of Gantt charts</u>

1. Easy to ***understand***
2. Identify the schedule ***baseline*** network
3. Allow for ***updating*** and ***control***
4. Identify ***resource needs***
5. Easy to ***create***

$$EF = ES + Duration$$
$$LS = LF - Duration$$
$$SL = LS - ES \text{ or}$$
$$SL = LF - EF$$
$$FS = ES_{successor} - EF$$

Calendar Dates

- Ultimately you will want to assign calendar dates to your project activities
- If a computer program is not used, dates are assigned manually. Lay out a calendar of workdays (exclude nonwork days) and number them. Then relate the calendar workdays to the workdays on your project network.
- Most computer programs will assign calendar dates automatically after you identify start dates, time units, non workdays, and other information.

ID	Duration	Task Name	Start	Finish	Late Start	Late Finish	Free Slack	Total Slack
1	2 days	Order review	Tue 1/1	Wed 1/2	Tue 1/1	Wed 1/2	0 days	0 days
2	15 days	Order vendor parts	Thu 1/3	Thu 1/17	Wed 1/16	Wed 1/30	13 days	13 days
3	10 days	Produce other standard parts	Thu 1/3	Sat 1/12	Mon 1/21	Wed 1/30	18 days	18 days
4	13 days	Design custom parts	Thu 1/3	Tue 1/15	Thu 1/3	Tue 1/15	0 days	0 days
5	18 days	Software development	Thu 1/3	Sun 1/20	Wed 1/23	Sat 2/9	20 days	20 days
6	15 days	Manufacture custom hardware	Wed 1/16	Wed 1/30	Wed 1/16	Wed 1/30	0 days	0 days
7	10 days	Assemble	Thu 1/31	Sat 2/9	Thu 1/31	Sat 2/9	0 days	0 days
8	5 days	Test	Sun 2/10	Thu 2/14	Sun 2/10	Thu 2/14	0 days	0 days

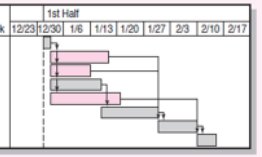

PERT and CPM

- CPM – Critical Path Method
- PERT – Program Evaluation and Review Technique
- Three-time estimates can be applied to any activity:
  - Optimistic (O)
  - Pessimistic (P)
  - Most Likely (M)

CPM
requires only a one time estimate per activity. This method uses only a Most Likely time estimate (M).

PERT
uses the distribution's mean to determine individual activity duration. Specifically, the PERT formula is

$$(P + 4M + O) / 6$$

Resources

Project Management

The Managerial Process

Fifth Edition

By: Erik W. Larson

Oregon State University

Clifford F. Gray

Oregon State University

جامعة الجميع الذكية

EVERYONE`S SMART UNIVERSITY